NAPETOST / VOLTAGE	120/230 V
FREKVENCA / FREQUENCY	50/60 Hz
NAZIVNA MOČ / NOMINAL POWER	1100W (230V) 1100W (120V)

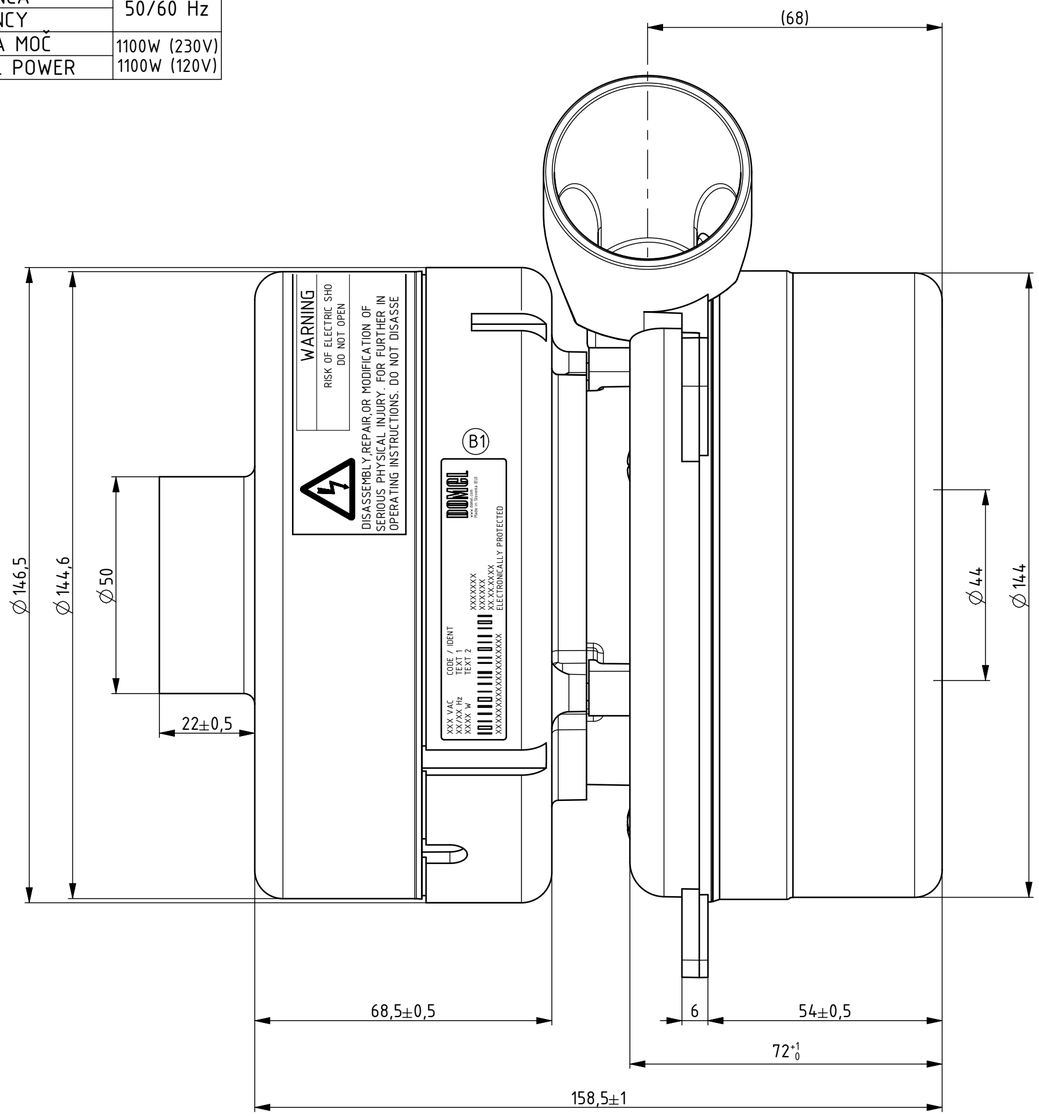

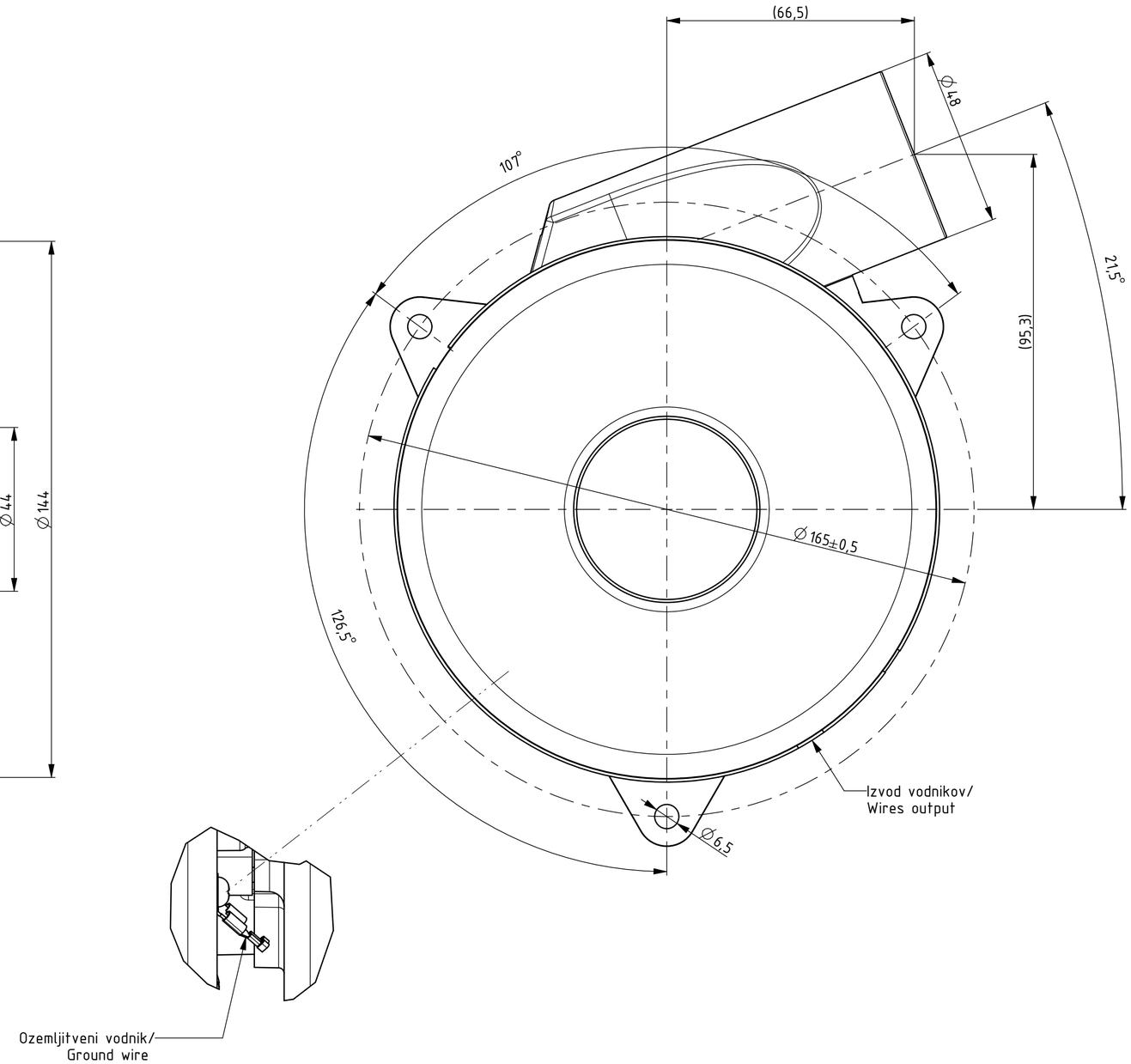

DOLŽINA VODNIKOV VKLJUČNO S KONEKTORJEM /
WIRES OUTPUT INCLUDING CONNECTOR:
250±30mm

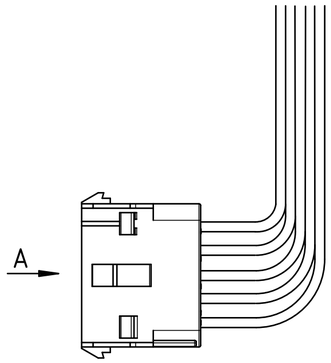

View A

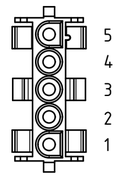

CONECTOR AMP 350810-1			
PIN	COLOR		
5	black	AC INPUT 120-230V±10%	
4	black	AC INPUT 120-230V±10%	
3	ye-gr	EARTH	
2	red	High	Isolated speed Control 0-10V DC
1	blue	Low	

OSNOVNE ZNAČILNOSTI		TYPICAL CHARACTERISTICS	
IZVEDBA	2-STOPENJSKA	FAN SYSTEM	2-STAGE
VLEŽAJENJE	DVA KROGLIČNA LEŽAJA	BEARINGS	DUAL BALL
VRSTA PRETOKA	MIMO MOTORJA	DISCHARGE	BY PASS
SMER VRTENJA	LEVA	DIRECTION OF ROTATION	CCW

Ozn. Mark	Št. obvestila Nr. of notice	Datum Date	Ime Name
B1	14911	18.09.20	Koblar U.
A0	13079	12.07.17	Koblar U.

Tolerance odprtih mer / Tolerances without individual indications: ISO 8015, ISO 2768 - mK

Površinska hrapavost / Surface finishing

	Datum/Date	Ime/Name
Izdelal / Designed	06.03.17	Koblar U.
Pregl. / Verified	18.09.20	Kavčič M.

DOMEL®
Otoki 21, 4228 Železniki, Slovenija

Merilo / Scale: 1:1

Original format: ISO 5457 - A2

Gradivo / Material

Naziv / Title: PUHALO / BLOWER

Koda / Code: 792.3.265-775

List / Sheet: 3+

Stran / Page: 1

7923265775_PUHALO

Izdelano s CAD/ProEngineer - ročno spreminjanje ni dovoljeno! Vsak prenos tretjim osebam ali uporaba v nedogovorjene namene ni dovoljena po zakonu o avtorskih pravicah.
Made with CAD/ProEngineer - changing is not allowed! Any unauthorized copying of this drawing or unauthorized distribution of the information contained herein is prohibited.