ENAPART

93 S Railroad Avenue Unit C
Bergenfield NJ 07621 USA
www.enapart.com
sales@enapart.com

Friedrich-Ebert-Anlage 36, 60325
Frankfurt am Main, Germany
www.enapart.de
anfrage@enapart.de

〒584-0023　大阪府富田林市若松町
東2丁目2番16号
www.enapart.co.jp
sales@enapart.co.jp

Via del Canneto 35,
Borgosatollo, Brescia - Italia
www.enapart.it
vendite@enapart.it

4 boulevard Carnot, 95400
villiers-le-bel, Paris, France
www.enapart.fr
sales@enapart.fr

PLAZA NUESTRA SEÑORA DE LAS
NIEVES 12 ,LOCAL ,50012,ZARAGOZA
www.enapart.es
ventas@enapart.es

Barbaros Mah. Ihlamur Bul. Ağaoğlu
My Newwork No:3/15 Ataşehir / İstanbul
www.enapart.net
satis@enapart.net

65049, ОДЕСА, ВУЛИЦЯ ІВАНА
ФРАНКА, БУДИНОК 55, ПОВЕРХ 3
www.enapart.com.ua
sales@enapart.com.ua

Складова база „Онгъл“, Склад А2, п.к.
4006, гр. Пловдив, България
www.enapart.bg
sales@enapart.bg

PRIVADA 10 B SUR #3908 COL.
ANZUREZ, C.P. 72530, PUEBLA,PUE
www.enapart.com.mx
sales@enapart.com.mx

MUNICIPIUL BUCUREŞTI, SECTOR 3,
B-DUL BASARABIA, NR.250, CORP P+5
www.enapart.ro
sales@enapart.ro

3 Austin Mews, High Street, Hemel
Hempstead, HP1 3AF , United Kingdom
www.enapart.co.uk
sales@enapart.co.uk

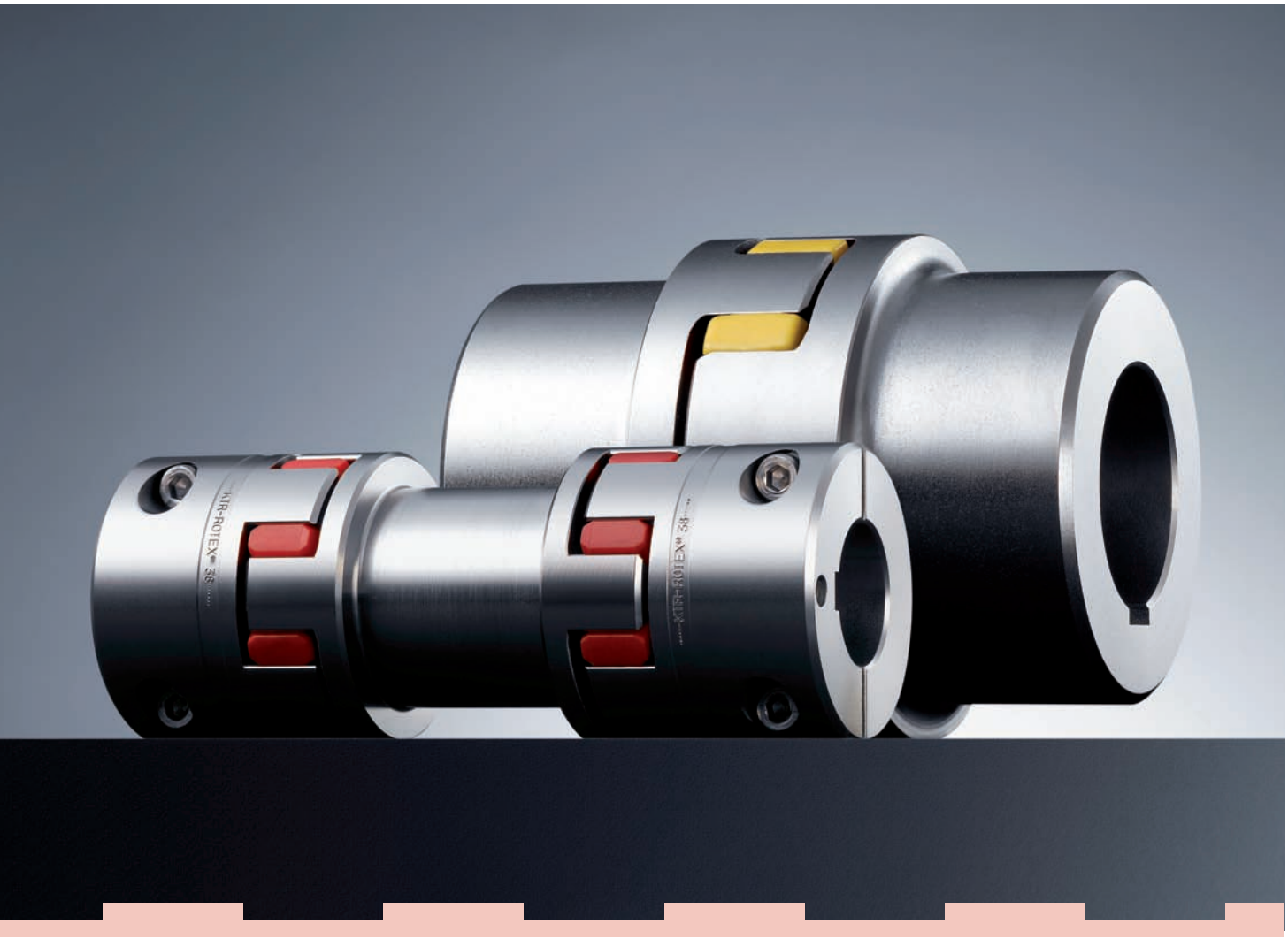

ROTEX®

Torsionally flexible coupling

Made for Motion KTR

Table of contents

ROTEX®
Torsionally flexible coupling 17

Coupling description 19
Coupling selection 20
Misalignments and installation 22
Spider types - Materials, characteristics and properties 23
Technical data 24
ROTEX® part numbers 25

Shaft coupling - cast materials 30
Shaft coupling - material steel 31
Clamping ring hubs 32
Steel cross clamp hubs 33

Flange designs AFN and BFN 34
Drop-out center coupling design A-H 35
Flange designs CF, CFN, DF and DFN 36

Double-cardanic spacer design ZS-DKM-H 37
Double-cardanic spacer design DKM 38
Intermediate shaft design ZWN and ZR 39

Design BTAN with brake drum/design SBAN with brake disc 40
Design AFN-SB special with brake disc 41
Design SD (shiftable at standstill) 42
Additional designs 43
Additional designs with torque limiter 44

Hub designs 45
Weights and mass moment of inertia 46

Coupling description

General description

ROTEX® couplings are designed to transmit torque between drive and driven components via curved jaw hubs and elastomeric elements commonly known as spiders. The combination of these components provides dampening and accommodation for misalignments. This product is available in a variety of metals, elastomers and mounting configurations to meet your specific needs.

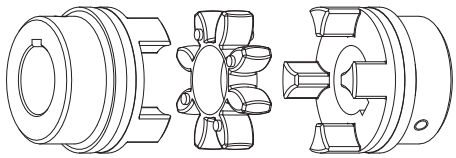

Function and Design

ROTEX® – couplings suitable for horizontal or vertical applications are constructed from a variety of materials and geometries providing a torsionally flexible platform optimizing the balance between inertia, coupling performance and application requirements. The machined concaved jaws provide a pocket for the crowned spider legs, allowing the hubs to articulate freely while accommodating misalignment, minimizing restoring forces, dampening shock and vibration while providing failsafe torque transmission. The symmetrical relationship of the hubs allows for a variety of accessories to accommodate different shaft distances.
Together with the curved jaw, the crowned design reduces edge loading of the ROTEX® spider while compensating for misalignment and providing system dampening. The unique geometry of the coupling, in addition to a variety of spider materials and durometers, contribute to the dampening characteristics of the system. In contrast to other flexible couplings with elastomeric elements in shear, ROTEX® coupling spiders are in compression, defining the torque of the coupling. This design characteristic results in a maximum torsional angle of 5° and minimizes spider expansion due to deformation at excessive speed/loads as illustrated.
Interlocking curved jaws with a variety of standard clamping options accommodates shafts up to 7.875 inches and a maximum nominal torque of 309,750 lb-in while still accommodating blind assembly. As defined by the spider, ROTEX couplings are suitable for moderate industrial temperature ranges. Together these features reduce the maintenance required during the life-cycle of the coupling.

Load on spider

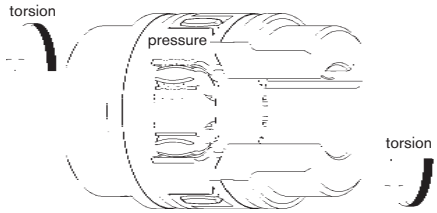

Deformation with load

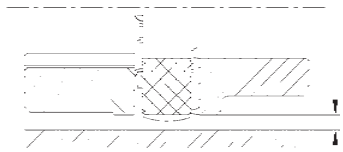

Explosion-proof use

ROTEX® couplings are suitable for power transmission in hazardous areas. The couplings are certified and conform to EC standard 94/9/EC (ATEX 95) as units of category 2G/2D and are suitable for use in hazardous areas of zone 1, 2, 21 and 22. Please read through our information included in our Type Examination Certificate and the operating and installation instructions at www.ktr.com.

Spiders

Intended for normal operating temperatures of - 40° to + 212° F, with transient temperature peaks up to + 298° F the standard spider material reduces required coupling maintenance. Continuous improvement of these materials has resulted in a standard spider of 92 Shore A which offers various advantages over other polyurethane materials. For higher torques, it is also possible to use a 95/98 Shore A or 64 Shore D-F when appropriate. The spiders are extremely resistant to wear, oil, ozone and aging as well as hydrolysis (ideal for tropical climates). The curve geometry of the spider and material contribute to the internal damping characteristics which help to protect the drive against dynamic overload.

Standard spider crowned legs

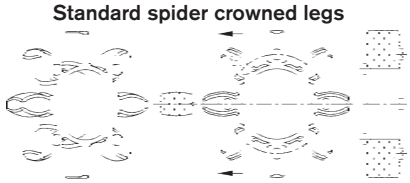

GS spiders
rectangular legs, with solid center
***used with spacers**

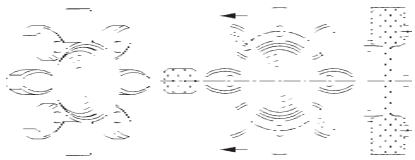

Comparison of loads

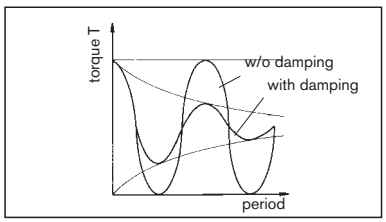

Twisting angle

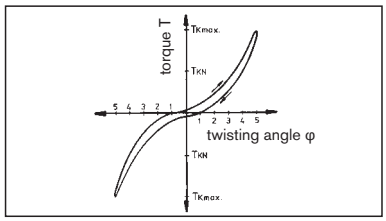

Dampening

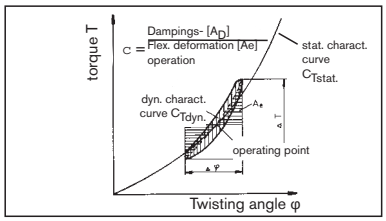

Coupling selection

The ROTEX® coupling is selected in accordance with DIN 740 part 2. The coupling must be dimensioned in a way that the permissible coupling load is not exceeded in any operating condition. For this purpose, the actual loads must be compared to the permissible parameters of the coupling.

1 **Drives without periodical torsional vibrations**
e. g. centrifugal pumps, fans, screw compressors, etc.
The coupling is selected taking into account the rated torques T_{KN} and maximum torque T_{Kmax}.

1.1 **Load produced by rated torque**

$$T_{KN} \geq T_N \cdot S_t$$

Taking ambient temperature into consideration, the permissible rated torque T_{KN} of the coupling must correspond at least to the rated torque T_N of the machine.

$$T_N \text{ [lb in]} = 63025 \frac{\text{[HP]}}{\text{[RPM]}}$$

1.2 **Load produced by torque shocks**

$$T_{Kmax} \geq T_S \cdot S_z \cdot S_t + T_N \cdot S_t$$

The permissible maximum torque of the coupling must correspond with the total of peak torque T_S and the rated torque T_N of the machine, taking into account the shock frequency Z and the ambient temperature.

Drive-sided shock
$T_S = T_{AS} \cdot M_A \cdot S_A$

Load-sided shock
$T_S = T_{LS} \cdot M_L \cdot S_L$

$$M_A = \frac{J_L}{J_A + J_L} \qquad M_L = \frac{J_A}{J_A + J_L}$$

This applies in case if the rated torque T_N of the machine is at the same time subject to shocks.

Knowing the mass distribution, shock direction and shock mode, the peak torque T_S can be calculated.

For drives with A. C.-motors with high masses on the load side we would recommend the calculation of the peak driving torque with the help of our simulation program.

2. **Drives with periodical torsional vibrations.** For drives subject to high torsional vibrations, e. g. diesel engines, piston compressors, piston pumps, generators, etc., it is necessary to perform a torsional vibration calculation to ensure safe operation. If requested, we will perform the torsional vibration calculation and the coupling selection for you. For details please contact KTR Engineering.

2.1 **Load produced by rated torque**

$$T_{KN} \geq T_N \cdot S_t$$

Taking ambient temperature into consideration, the permissible rated torque T_{KN} of the coupling must correspond with the rated torque T_N of the machine.

2.2 **Passing through the resonance range**

$$T_{Kmax} \geq T_S \cdot S_t$$

Taking ambient temperature into consideration, the peak torque T_S arising when the resonance range is run through must not exceed the maximum torque T_{Kmax} of the coupling.

2.3 **Load produced by vibratory torque shocks**

$$T_{KW} \geq T_W \cdot S_t$$

Taking ambient temperature into consideration, the permissible vibratory torque T_{KW} of the coupling must not be exceeded by the highest periodical vibratory torque T_W with operating speed.

For higher operating frequencies f > 10, the heat produced by damping in the elastomer part is considered as damping power P_W.

The permissible damping power P_{KW} of the coupling depends on the ambient temperature and must not be exceeded by the damping power produced.

$$P_{KW} \geq P_W$$

Description	Symbol	Definition or explanation
Rated torque of coupling	T_{KN}	Torque that can continuously be transmitted over the entire permissible speed range
Maximum torque of coupling	T_{Kmax}	Torque that can be transmitted as dynamic load $ 10^5 times or 5 x 10^4 as vibratory load, respectively, during the entire operating life of the coupling
Vibratory torque of coupling	T_{KW}	Torque amplitude of the permissible periodical torque fluctuation with a frequency of 10 Hz and a basic load of T_{KN} or dynamic load up to T_{KN}, respectively
Damping power of coupling	P_{KW}	Permissible damping power with an ambient temperature of + 86°F.
Rated torque of coupling	T_N	Stationary rated torque on the coupling
Peak torque of the machine	T_S	Peak torque on the coupling
Peak torque on the driving side	T_{AS}	Peak torque with torque shock on the driving side, e. g. breakdown torque of the electric motor

Description	Symbol	Definition or explanation
Peak torque of load side	T_{LS}	Peak torque with torque shock on load side, e. g. braking
Vibratory torque of machine	T_W	Amplitude of the vibratory torque effective on the coupling
Damping power of the machine	P_W	Damping power which is effective on the coupling due to the load produced by the vibratory torque
Moment of inertia of driving side	J_A	Total of moments of inertia existing on the driving or load side referring to the coupling speed
Moment of inertia of load side	J_L	
Rotational inertia coefficient of driving side	M_A	Factor taking into account the mass distribution with shocks and vibrations produced on the driving or load side
Rotational inertia coefficient of load side	M_L	$M_A = \frac{J_L}{J_A + J_L}$ $M_L = \frac{J_A}{J_A + J_L}$

Coupling selection

Service Factor S_t for Temperature °F				
	-22 °F 86 °F	104 °F	140 °F	176 °F
S_t	1.0	1.2	1.4	1.8

Service Factor S_Z for Starting Frequency				
starting frequency/h	100	200	400	800
S_Z	1.0	1.2	1.4	1.6

Service factor S_A/S_L for shocks	
	S_A/S_L
gentle shocks	1.5
average shocks	1.8
heavy shocks	2.5

Allowable load on key of the coupling hub

The shaft-hub-connection has to be verified by the customer. Allowable surface pressure according to DIN 6892 (method C).

Cast iron EN-GJL-250 (GG 25)	32,633 psi
material nodular iron EN-GJS-400-15 (GGG 40)	32,633 psi
material steel S355J2G3 (St 52.3)	36,259 psi
for other steel materials p_{zul} =	$0{,}9 \cdot R_e$ ($R_{p0.2}$)

Example of selection:

Given: Details of driving side

A. C. motor	449TS	$S_A = 1.8$
Motor output	P = 300 HP	
Speed	n = 1,750 rpm	
Moment of inertia driven side	J_A = 25.7 lb in sec²	
Start-up frequency	z = 6 1/h	$S_Z = 1.0$
Ambient temperature	= + 140 °F	$S_t = 1.4$

Given: Details of load side

Screw compressor	
Rated torque of load side	T_{LN} = 8,230 lb-in
Moment of inertia of load side	J_L = 60.2 lb in sec²

Calculation

● Rated driving torque

$$T_{AN}\ [\text{lb-in}] = 63{,}025 \frac{P(\text{HP})}{n_{AN}\ [\text{rpm}]}$$

$$T_{AN} = 63{,}025 \cdot \frac{300\ \text{HP}}{1{,}750\ \text{rpm}} = \underline{10{,}804\ \text{lb-in}}$$

Coupling selection:

● Load produced by rated torque:

$$T_{KN} \geq T_{LN} \cdot S_t$$

$$T_{KN} \geq 8{,}230\ \text{lb-in} \cdot 1.4 = \underline{11{,}522\ \text{lb-in}}$$

Selected: ROTEX® Size 90 - spider 92 Shore A with:

T_{KN} = 21,240 lb-in

$T_{K\,max}$ = 42,480 lb-in

● Load produced by torque shocks:

$$T_{K\,max} \geq T_S \cdot S_z \cdot S_t$$

Drive-sided shock

$$T_S = T_{AS} \cdot M_A \cdot S_A$$

$$M_A = \frac{J_L}{(J_A + J_L)} = \frac{60.2\ \text{lb-in-sec}^2}{(25.7\ \text{lb-in-sec}^2 + 60.2\ \text{lb-in-sec}^2)} = \underline{0.7}$$

● Driving torque

$$T_{AS} = 2.0 \cdot T_{AN}$$
$$= 2.0 \cdot 10{,}804\ \text{lb-in} = \underline{21{,}608\ \text{lb-in}}$$

$$T_S = 21{,}608\ \text{lb-in} \cdot 0.7 \cdot 1.8 = \underline{27{,}226\ \text{lb-in}}$$

$$T_{K\,max} \geq 27{,}226\ \text{lb-in} \cdot 1 \cdot 1.4 = \underline{38{,}117\ \text{lb-in}}$$

$T_{K\,max}$ with 42,480 lb-in ≥ 38,117 lb-in ✓

Misalignments and installation

Misalignments

Axial misalignment ΔKa

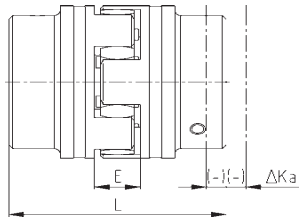

$L_{max.} = L + \Delta Ka$

Parallel misalignment ΔKr

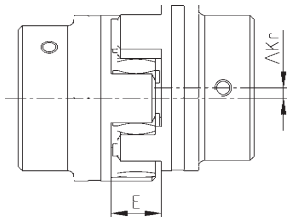

Angular misalignment ΔKw [degrees]

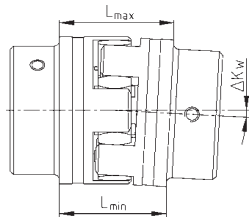

$\Delta Kw\ [in] = L_{max} - L_{min}$

Misalignments																	
ROTEX® Size	14	19	24	28	38	42	48	55	65	75	90	100	110	125	140	160	180
Max. axial misalignment ΔKa [in]	-0.02 +0.04	-0.02 +0.05	-0.02 +0.06	-0.03 +0.06	-0.03 +0.07	-0.04 +0.08	-0.04 +0.08	-0.04 +0.09	-0.04 +0.10	-0.06 +0.12	-0.06 +0.13	-0.06 +0.15	-0.08 +0.17	-0.08 +0.18	-0.08 +0.20	-0.10 +0.22	-0.12 +0.25
Max. parallel misalignment at n=1,800 rpm ΔKr [in]	0.006	0.007	0.008	0.009	0.010	0.011	0.013	0.014	0.015	0.017	0.018	0.019	0.020	0.021	0.022	0.022	0.024
Max. angular misalignment at n=1,800 rpm ΔKw [degree]	1.1	1.0	0.8	0.9	0.9	1.0	1.1	1.1	1.1	1.1	1.2	1.2	1.2	1.2	1.2	1.2	1.2
ΔKw [in]	0.024	0.029	0.031	0.039	0.051	0.067	0.079	0.090	0.102	0.126	0.161	0.181	0.213	0.248	0.256	0.303	0.354

The above misalignment figures for ROTEX® couplings are standard values, taking into account the load of the coupling up to the rated torque T_{KN} and an operating speed n = 1,800 RPM along with an ambient temperature of + 86° F.
For other operating parameters, please ask for KTR-Norm 20240 on misalignments for ROTEX®. The maximum angular and parallel misalignments must not be used concurrently. For example; 70% of the maximum parallel value allows 30% of the maximum angular value. Also, care should be taken to accurately maintain the distance dimension “E”, allowing for axial clearance of the coupling while in operation. In case of an axial thrust, the dimension "L" must be taken as a minimum dimension in order to keep the spider free from pressure against the face.
Detailed installation instructions are available at www.ktr.com.

Installation

Maximum shaft size includes standard keyway which can extend into the spider bore $Ød_W$

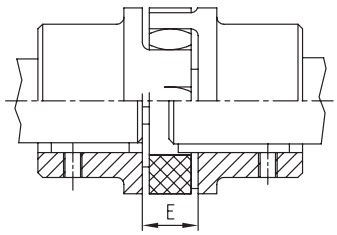

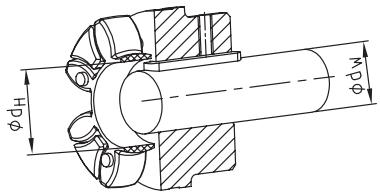

Dimensions for assembly																	
ROTEX® Size	14	19	24	28	38	42	48	55	65	75	90	100	110	125	140	160	180
Distance dimension E	0.51	0.63	0.71	0.79	0.94	1.02	1.10	1.18	1.38	1.57	1.77	1.97	2.17	2.36	2.56	2.95	3.35
Dimension d_H	0.394	0.709	1.063	1.181	1.496	1.811	2.008	2.362	2.677	3.150	3.937	4.449	5.000	5.787	6.496	7.480	8.661
Dimension d_W	0.276	0.500	0.750	0.875	1.125	1.375	1.500	1.875	2.125	2.500	3.125	3.625	3.875	4.500	5.250	6.000	7.000

Spider types - Materials, characteristics and properties

- 92 Shore A standard spider
- suitable for all hub materials
- for general drive applications
- good dampening characteristics
- temperature range from - 40 °F to + 194 °F
- available sizes 14 to 90

- 95/98 Shore A spider
- optimum with hub materials; EN-GJL-250 (GG 25), steel or EN-GJS-400-15 (GGG 40)
- transmits higher torques while dampening vibration
- temperature range from - 22 °F to + 194 °F
- available sizes 14 to 90

- 64 Shore D-F
- optimum with hub materials; steel or EN-GJS-400-15 (GGG 40)
- transmits double the torque of 92 Shore A spiders
- low twisting angle
- spider suitable for demanding applications
- resistant to hydrolysis
- temperature range from - 22 °F to + 230 °F
- available sizes 14 to 100

NEW

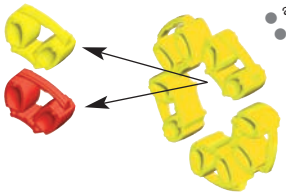

- available in hardness's 92 and 95 Shore A
- suitable for all hub materials
- DZ (segmented elements)
- temperature range from - 22 °F to + 194 °F
- available in the sizes 90 - 180

Standard spiders						
Spider type hardness (Shore)	Color	Material	Temperature range (°F)		Available for coupling size	Typical applications
			Continuous temperature	Intermittent temperature		
92 Sh A	yellow	polyurethane	- 40 to + 194	-58 to + 248	size 14 – 180	– for all applications in general engineering and hydraulics – Standard applications with average elasticity
95/98 Sh A	red	polyurethane	- 22 to + 194	- 40 to + 248	size 14 – 180	– good torque transmission with good damping properties
64 Sh D-F	white with green tips	polyurethane	- 22 to + 230	- 22 to + 266	size 14 – 180	– high air moisture, resistant to hydrolysis – displacement of critical speeds

Spiders for special applications					
Typical applications	Spider type hardness (Shore)	Identification color	Material	Perm. temperature range (°F)	
				Continuous temperature	Max. temperature short time
For high dynamic load, high air moisture/resistant to hydrolysis	94 Sh A-T	blue with yellow tips	polyurethane	- 58 to + 230	- 76 to + 266
Drives with higher loads, small twisting angles - torsionally rigid, high ambient temperatures	64 Sh D-H	green	hytrel	- 58 to + 230	- 76 to + 302
Small twisting angles and high torsion spring stiffness, high ambient temperature, good resistance to chemicals [1]	polyamide	-	PA	- 4 to + 266	- 22 to + 302
Small twisting angles and high torsion spring stiffness, very high ambient temperature, good resistance to chemicals, resistant to hydrolysis	PEEK	light grey	PEEK	up to + 482 (ATEX up to max. +320)	to + 482

[1] Properties dependent on compound

Technical data

ROTEX® sizes for all designs and materials	Max. speed [rpm] with V = 98 ft/s	Max. speed [rpm] with V = 131 ft/s	Twisting angle with T_{KN} φ	Twisting angle with $T_{K\,max}$ φ	Torque [lb-in] Rated T_{KN}	Torque [lb-in] Max $T_{K\,max}$	Torque [lb-in] Vibratory T_{KW}	Damping power [W] with +86 °F P_{KW}	Torsion stiffness C_{dyn} [x10³ lb-in/rad] 1.00 T_{KN}	0.75 T_{KN}	0.50 T_{KN}	0.25 T_{KN}
Polyurethane 92 Shore A spider; color yellow												
14	19,000	–	6,4°	10°	66	130	18	–	3.4	2.7	2.1	1.2
19	14,000	19,000			89	170	23	4.8	11.3	9.3	7.1	4.2
24	10,600	14,000			300	610	81	6.6	43.0	35.2	26.6	15.8
28	8,500	11,800			840	1,680	220	8.4	96.5	79.1	59.8	35.5
38	7,100	9,500			1,680	3,360	430	10.2	186.3	152.8	115.5	68.5
42	6,000	8,000			2,340	4,690	610	12.0	210.1	172.3	130.3	77.3
48	5,600	7,100			2,740	5,480	710	13.8	324.8	266.3	201.4	119.4
55	4,750	6,300			3,620	7,250	940	15.6	448.9	368.1	278.4	165.0
65	4,250	5,600	3.2°	5°	5,530	11,060	1,440	18.0	859.7	705.0	533.0	316.0
75	3,550	4,750			11,320	22,650	2,940	21.6	1,003.0	822.4	621.9	368.6
90	2,800	3,750			21,240	42,480	5,520	30.0	1,682.5	1,379.6	1,043.2	618.3
100	2,500	3,350			29,200	58,410	7,590	36.0	2,240.0	1,836.8	1,388.8	823.2
110	2,240	3,000			42,480	849,600	11,040	42.0	2,758.1	2,261.6	1,710.0	1,013.6
125	2,000	2,650			58,850	117,710	15,300	48.0	4,203.0	3,446.5	2,605.8	1,544.6
140	1,800	2,360			75,670	151,350	19,670	54.6	5,846.0	4,793.7	3,624.5	2,148.4
160	1,500	2,000			113,290	226,580	29,450	75.0	7,880.6	6,462.1	4,886.0	2,896.1
180	1,400	1,800			165,070	330,140	42,910	78.0	22,734.3	18,642.2	14,095.3	8,354.9
Polyurethane 98 Shore A spider; color red												
14	19,000	–	6.4°	10°	110	220	29	-	5.0	4.1	3.1	1.9
19	14,000	19,000			150	300	39	4.8	25.8	21.2	16.0	9.5
24	10,600	14,000			530	1,060	140	6.6	87.9	72.0	54.5	32.3
28	8,500	11,800			1,410	2,830	370	8.4	236.9	194.3	146.9	87.1
38	7,100	9,500			2,870	5,750	750	10.2	429.9	352.5	266.5	158.0
42	6,000	8,000			3,980	7,960	1,030	12.0	482.4	395.6	299.1	177.3
48	5,600	7,100			4,640	9,290	1,210	13.8	577.9	473.9	358.3	212.4
55	4,750	6,300			6,060	12,120	1,570	15.6	840.6	689.3	521.1	308.9
65	4,250	5,600	3.2°	5°	8,310	16,630	2,150	18.0	1,146.3	940.0	710.7	421.3
75	3,550	4,750			16,990	33,980	4,410	21.6	1,748.1	1,433.4	1,083.8	642.4
90	2,800	3,750			31,860	63,720	8,280	30.0	2,763.3	2,265.9	1,713.2	1,015.5
100	2,500	3,350			43,810	87,620	11,390	36.0	3,392.2	2,781.6	2,103.2	1,246.7
110	2,240	3,000			63,720	127,450	16,560	42.0	6,107.7	5,008.3	3,786.8	2,244.6
125	2,000	2,650			88,510	177,020	23,010	48.0	11,892.6	9,751.9	7,373.4	4,370.5
140	1,800	2,360			113,290	226,580	29,450	54.6	12,609.0	10,339.4	7,817.6	4,633.9
160	1,500	2,000			169,930	339,870	44,180	75.0	21,970.2	18,015.6	13,621.5	8,074.1
180	1,400	1,800			247,820	495,650	64,430	78.0	31,522.4	25,848.5	19,543.9	11,584.5
Polyurethane 64 Shore D-F spider; color white with green tips [1)]												
14	19,000	–	4.5°	7.0°	140	280	37	9.0	6.7	5.5	4.2	2.5
19	14,000	19,000			180	370	49	7.2	47.4	38.9	29.4	17.4
24	10,600	14,000			660	1,320	170	9.9	133.7	109.7	82.9	49.1
28	8,500	11,800			1,770	3,540	460	12.6	243.6	199.8	151.0	89.6
38	7,100	9,500			3,580	7,160	920	15.3	620.9	509.1	384.9	228.2
42	6,000	8,000			4,950	9,910	1,290	18.0	706.8	579.7	438.3	259.8
48	5,600	7,100			5,790	11,590	1,500	20.7	845.4	693.2	524.2	310.7
55	4,750	6,300			7,300	14,600	1,900	23.4	955.2	783.3	592.2	351.0
65	4,250	5,600	2.5°	3.6°	10,390	20,790	2,700	27.0	1,337.3	1,096.6	829.2	491.5
75	3,550	4,750			21,240	42,480	5,520	32.4	2,197.0	1,801.5	1,362.2	807.4
90	2,800	3,750			39,820	79,650	10,350	45.0	5,970.2	4,895.6	3,701.5	2,194.1
100	2,500	3,350			54,740	109,480	14,230	54.0	7,622.2	6,250.2	4,725.8	2,801.2
110	2,240	3,000			79,650	159,310	20,710	63.0	10,077.7	8,263.6	6,248.1	3,703.5
125	2,000	2,650			110,630	221,270	28,760	72.0	12,704.5	10,417.7	7,876.8	4,668.9
140	1,800	2,360			141,610	283,230	36,820	81.9	15,761.2	12,924.2	9,771.9	5,792.3
160	1,500	2,000			212,420	424,840	55,230	113	27,223.9	22,323.6	16,878.9	10,004.8
180	1,400	1,800			309,780	619,570	80,540	117	53,206.0	43,629.0	32,987.8	19,553.2

Unless specified, Shore hardness 92 A (yellow) are standard

For peripheral speeds exceeding V = 115 ft/sec dynamic balancing of steel or nodular iron hubs is required.

[1)] Hub material: EN-GJS-400-15 (GGG 40); steel

Polyurethane spider	92 Shore A	95/98 Shore A	64 Shore D-F
Relative Damping ψ [-]	0.80	0.80	0.75
Resonance factor V_R [-]	7.90	7.90	8.50

ROTEX® part numbers

Part Number Pages to follow

Notes:

ROTEX® part numbers

ROTEX Hub - Part numbers by product size and standard material							
Inch Sizes		14	19	24	28	38	42
Bore	Keyway	Sintered Metal	Aluminum			Cast Iron	
1/4	No Key	BA020142170611	BA020196070611				
5/16	No Key	BA020142170711	BA020196070711				
3/8	No Key	BA020142170911	BA020196070911				
3/8	3/32	BA020142170902	BA020196070902	BA020246070902			
3/8	1/8	BA020142170903	BA020196070903	BA020246070903			
7/16	No Key	BA020142171111	BA020196071111	BA020246071111	BA020286071111		
7/16	3/32	BA020142171101	BA020196071101	BA020246071101	BA020286071101		
7/16	1/8	BA020142171102	BA020196071102	BA020246071102	BA020286071102		
1/2	No Key	BA020142171211	BA020196071211	BA020246071211	BA020286071211	BA020383071211	
1/2	1/8	BA020142171200	BA020196071200	BA020246071200	BA020286071200	BA020383071200	
9/16	No Key	BA020142171411	BA020196071411	BA020246071411	BA020286071411	BA020383071411	BA020423071411
9/16	1/8	BA020142171400	BA020196071400	BA020246071400	BA020286071400	BA020383071400	BA020423071400
5/8	No Key	BA020142171511	BA020196071511	BA020246071511	BA020286071511	BA020383071511	BA020423071511
5/8	5/32	BA020142171503	BA020196071503	BA020246071503	BA020286071503	BA020383071503	BA020423071503
5/8	3/16	BA020142171500	BA020196071500	BA020246071500	BA020286071500	BA020383071500	BA020423071500
11/16	3/16		BA020196071700	BA020246071700	BA020286071700	BA020383071700	BA020423071700
3/4	No Key		BA020196071911	BA020246071911	BA020286071911	BA020383071911	BA020423071911
3/4	1/8		BA020196071901	BA020246071901	BA020286071901	BA020383071901	BA020423071901
3/4	3/16		BA020196071900	BA020246071900	BA020286071900	BA020383071900	BA020423071900
13/16	3/16		BA020196172000	BA020246072000	BA020286072000	BA020383072000	BA020423072000
7/8	No Key		BA020196172211	BA020246072211	BA020286072211	BA020383072211	BA020423072211
7/8	3/16		BA020196172200	BA020246072200	BA020286072200	BA020383072200	BA020423072200
7/8	1/4		BA020196172202	BA020246072202	BA020286072202	BA020383072202	BA020423072202
15/16	1/4		BA020196172300	BA020246072300	BA020286072300	BA020383072300	BA020423072300
1	1/4			BA020246172500	BA020286072500	BA020383072500	BA020423072500
1	3/16			BA020246172502	BA020286072502	BA020383072502	BA020423072502
1 1/16	1/4			BA020246172600	BA020286072600	BA020383072600	BA020423072600
1 1/8	1/4			BA020246172800	BA020286072800	BA020383072800	BA020423072800
1 3/16	1/4				BA020286173000	BA020383073000	BA020423073000
1 1/4	1/4				BA020286173100	BA020383073100	BA020423073100
1 1/4	5/16				BA020286173102	BA020383073102	BA020423073102
1 5/16	5/16				BA020286173300	BA020383073300	BA020423073300
1 3/8	5/16				BA020286173400	BA020383073400	BA020423073400
1 3/8	3/8				BA020286173401	BA020383073401	BA020423073401
1 7/16	3/8				BA020286173600	BA020383073600	BA020423073600
1 1/2	5/16				BA020286173802	BA020383073802	BA020423073802
1 1/2	3/8				BA020286173800	BA020383173800	BA020423073800
1 9/16	3/8					BA020383173900	BA020423073900
1 5/8	3/8					BA020383174100	BA020423074100
1 11/16	3/8					BA020383174200	BA020423074200
1 3/4	3/8					BA020383174400	BA020423174400
1 3/4	7/16					BA020383174402	BA020423174402
1 13/16	1/2					BA020383174600	BA020423174600
1 7/8	1/2						BA020423174700
1 15/16	1/2						BA020423174900
2	1/2						BA020423175000
2 1/16	1/2						BA020423175200
2 1/8	1/2						BA020423175300

All hubs supplied standard with one setscrew
Non-standard bores available. Consult KTR Engineering
Inch bores machined to AGMA Class 1

ROTEX® part numbers

ROTEX Hubs - Part numbers by product size and standard material							
Metric Sizes		14	19	24	28	38	42
Bore	Keyway	Sintered Metal	Aluminum			Cast Iron	
6	2	BA020142100600	BA020196000600				
8	2	BA020142100800	BA020196000800				
9	3	BA020142100900	BA020196000900	BA020246000900			
10	3	BA020142101000	BA020196001000	BA020246001000	BA020286001000		
11	4	BA020142101100	BA020196001100	BA020246001100	BA020286001100		
12	4	BA020142101200	BA020196001200	BA020246001200	BA020286001200	BA020383001200	
14	5	BA020142101400	BA020196001400	BA020246001400	BA020286001400	BA020383001400	BA020423001400
15	5	BA020142101500	BA020196001500	BA020246001500	BA020286001500	BA020383001500	BA020423001500
16	5	BA020142101600	BA020196001600	BA020246001600	BA020286001600	BA020383001600	BA020423001600
18	6		BA020196001800	BA020246001800	BA020286001800	BA020383001800	BA020423001800
19	6		BA020196001900	BA020246001900	BA020286001900	BA020383001900	BA020423001900
20	6		BA020196102000	BA020246002000	BA020286002000	BA020383002000	BA020423002000
22	6		BA020196102200	BA020246002200	BA020286002200	BA020383002200	BA020423002200
24	8		BA020196102400	BA020246002400	BA020286002400	BA020383002400	BA020423002400
25	8			BA020246102500	BA020286002500	BA020383002500	BA020423002500
28	8			BA020246102800	BA020286002800	BA020383002800	BA020423002800
30	8				BA020286103000	BA020383003000	BA020423003000
32	10				BA020286103200	BA020383003200	BA020423003200
35	10				BA020286103500	BA020383003500	BA020423003500
38	10				BA020286103800	BA020383003800	BA020423003800
40	12					BA020383004000	BA020423004000
42	12					BA020383104200	BA020423004200
45	14					BA020383104500	BA020423004500
48	14					BA020383104800	BA020423104800
50	14						BA020423105000
55	16						BA020423105500

All hubs supplied standard with one setscrew
Non standard bores available. Consult KTR Engineering
Metric bores machined to H7 or G7 if greater than 55mm

ROTEX Spiders - Part numbers by product size and material								
Type / Hardness	Color	Material	14	19	24	28	38	42
92 SH A	Yellow	Polyurethane	020141000001	020191000001	020241000001	020281000001	020381000001	020421000001
95/98 SH A	Red	Polyurethane	020141000002	020191000002	020241000002	020281000002	020381000002	020421000002
64 SH D-F	White w/ green tips	Polyurethane	020141000015		020241000015	020281000015	020381000015	020421000015
94 SH A-T	Blue w/ yellow tips	Polyurethane		020191000044	020241000044	020281000044	020381000044	020421000044
64 SH D-H	Green	Hytrel		020191000025	020241000025	020281000025	020381000025	020421000025
Polyamide	White	PA		020191000088	020241000088	020281000088	020381000088	
PEEK	Light gray	PEEK		020191000075	020241000076	020281000075	020381000073	020421000079

SAE Splines

ROTEX Hubs - Part numbers by product size and standard material									
Teeth	Pitch	SAE	Major Diameter	Minor Diameter	Shaft Diameter	24	28	38	42
						Steel			
9	16/32	A	0.651	0.509	0.625	BA020245141601	BA020285141601	BA020385041601	
11	16/32		0.776	0.631	0.750	BA020245141901	BA020285141901	BA020385041901	BA020425041901
13	16/32	B	0.901	0.754	0.875	BA020245142201	BA020285142201	BA020385042201	BA020425042201
15	16/32	BB	1.026	0.877	1.000		BA020285142601	BA020385042601	BA020425042601
14	12/24	C	1.283	1.087	1.250		BA020285143201	BA020385043201	BA020425043201
21	16/32		1.401	1.250	1.375			BA020385042101	BA020425043501
17	12/24	CC	1.533	1.334	1.500			BA020385043801	BA020425043801
23	16/32		1.526	1.375	1.500				BA020425043802
13	8/16	D, E	1.798	1.506	1.750				BA020425044501

All hubs supplied standard with cross clamp
Additonal splines available. Consult KTR Engineering

ROTEX® part numbers

ROTEX Hubs - Part numbers by product size and standard material						
Inch Sizes		48	55	65	75	90
Bore	Keyway	Cast Iron				
5/8	No Key	BA020483071511				
5/8	5/32	BA020483071503				
5/8	3/16	BA020483071500				
11/16	11/16	BA020483071700				
3/4	No Key	BA020483071911				
3/4	1/8	BA020483071901				
3/4	3/16	BA020483071900				
13/16	3/16	BA020483072000	BA020553072000			
7/8	No Key	BA020483072211	BA020553072211	BA020653072211		
7/8	3/16	BA020483072200	BA020553072200	BA020653072200		
7/8	1/4	BA020483072202	BA020553072202	BA020653072202		
15/16	1/4	BA020483072300	BA020553072300	BA020653072300		
1	1/4	BA020483072500	BA020553072500	BA020653072500		
1	3/16	BA020483072502	BA020553072502	BA020653072502		
1 1/16	1/4	BA020483072600	BA020553072600	BA020653072600		
1 1/4	1/4	BA020483072800	BA020553072800	BA020653072800		
1 3/16	1/4	BA020483073000	BA020553073000	BA020653073000	BA020753073000	
1 1/4	1/4	BA020483073100	BA020553073100	BA020653073100	BA020753073100	
1 1/4	5/16	BA020483073102	BA020553073102	BA020653073102	BA020753073102	
1 5/16	5/16	BA020483073300	BA020553073300	BA020653073300	BA020753073300	
1 3/8	5/16	BA020483073400	BA020553073400	BA020653073400	BA020753073400	
1 3/8	3/8	BA020483073401	BA020553073401	BA020653073401	BA020753073401	
1 7/16	3/8	BA020483073600	BA020553073600	BA020653073600	BA020753073600	
1 1/2	5/16	BA020483073802	BA020553073802	BA020653073802	BA020753073802	
1 1/2	3/8	BA020483073800	BA020553073800	BA020653073800	BA020753073800	
1 9/16	3/8	BA020483073900	BA020553073900	BA020653073900	BA020753073900	
1 5/8	3/8	BA020483074100	BA020553074100	BA020653074100	BA020753074100	BA020903074100
1 11/16	3/8	BA020483074200	BA020553074200	BA020653074200	BA020753074200	BA020903074200
1 3/4	3/8	BA020483074400	BA020553074400	BA020653074400	BA020753074400	BA020903074400
1 3/4	7/16	BA020483074402	BA020553074402	BA020653074402	BA020753074402	BA020903074402
1 13/16	1/2	BA020483074600	BA020553074600	BA020653074600	BA020753074600	BA020903074600
1 7/8	1/2	BA020483074700	BA020553074700	BA020653074700	BA020753074700	BA020903074700
1 15/16	1/2	BA020483174900	BA020553074900	BA020653074900	BA020753074900	BA020903074900
2	1/2	BA020483175000	BA020553075000	BA020653075000	BA020753075000	BA020903075000
2 1/16	1/2	BA020483175200	BA020553075200	BA020653075200	BA020753075200	BA020903075200
2 1/8	1/2	BA020483175300	BA020553075300	BA020653075300	BA020753075300	BA020903075300
2 3/16	1/2	BA020483175500	BA020553075500	BA020653075500	BA020753075500	BA020903075500
2 1/4	1/2	BA020483175700	BA020553075700	BA020653075700	BA020753075700	BA020903075700
2 3/8	5/8	BA020483176000	BA020553176000	BA020653076000	BA020753076000	BA020903076000
2 5/8	5/8		BA020553176600	BA020653076600	BA020753076600	BA020903076600
2 7/8	3/4				BA020753077300	BA020903077300
2 15/16	3/4				BA020753077400	BA020903077400
3	3/4				BA020753077600	BA020903077600
3 1/8	3/4					BA020903077900
3 1/4	3/4					BA020903078200
3 3/8	7/8					BA020903078500
3 1/2	7/8					BA020903078800
3 5/8	7/8					BA020903079200
3 3/4	3/4					BA020903079500

All hubs supplied standard with one setscrew
Non standard bores available. Consult KTR Engineering
Inch bores machined to AGMA Class 1

ROTEX® part numbers

ROTEX Hubs - Part numbers by product size and standard material						
Metric Sizes		48	55	65	75	90
Bore	Keyway	Cast Iron				
15	5	BA020483001500				
16	5	BA020483001600				
18	6	BA020483001800				
19	6	BA020483001900				
20	6	BA020483002000	BA020553002000			
22	6	BA020483002200	BA020553002200	BA020653002200		
24	8	BA020483002400	BA020553002400	BA020653002400		
25	8	BA020483002500	BA020553002500	BA020653002500		
28	8	BA020483002800	BA020553002800	BA020653002800		
30	8	BA020483003000	BA020553003000	BA020653003000	BA020753003000	
32	10	BA020483003200	BA020553003200	BA020653003200	BA020753003200	
35	10	BA020483003500	BA020553003500	BA020653003500	BA020753003500	
38	10	BA020483003800	BA020553003800	BA020653003800	BA020753003800	
40	12	BA020483004000	BA020553004000	BA020653004000	BA020753004000	BA020903004000
42	12	BA020483004200	BA020553004200	BA020653004200	BA020753004200	BA020903004200
45	14	BA020483004500	BA020553004500	BA020653004500	BA020753004500	BA020903004500
48	14	BA020483004800	BA020553004800	BA020653004800	BA020753004800	BA020903004800
50	14	BA020483005000	BA020553005000	BA020653005000	BA020753005000	BA020903005000
55	16	BA020483105500	BA020553005500	BA020653005500	BA020753005500	BA020903005500
60	18	BA020483106000	BA020553006000	BA020653006000	BA020753006000	BA020903006000
65	18		BA020553106500	BA020653006500	BA020753006500	BA020903006500
70	20		BA020553107000	BA020653007000	BA020753007000	BA020903007000
75	20				BA020753007500	BA020903007500
80	22				BA020753008000	BA020903008000
85	22					BA020903008500
90	25					BA020903009000

All hubs supplied standard with one setscrew
Non standard bores available. Consult KTR Engineering
Metric bores machined to H7 or G7 if greater than 55mm

ROTEX Spiders - Part numbers by product size and material							
Type / Hardness	Color	Material	48	55	65	75	90
92 SH A	Yellow	Polyurethane	020481000001	020551000001	020651000001	020751000001	020901000001
95/98 SH A	Red	Polyurethane	020481000002	020551000002	020651000002	020751000002	020901000002
64 SH D-F	White w/ green tips	Polyurethane	020481000015	020551000015	020651000015	020751000015	020901000015
94 SH A-T	Blue w/ yellow tips	Polyurethane	020481000044	020551000044	020651000044	020751000044	020901000044
64 SH D-H	Green	Hytrel	020481000025	020551000025		020751000025	
Polyamide	White	PA		020551000088	020651000088	020751000088	
PEEK	Light gray	PEEK	020141000072	020551000075	020651000075	020751000084	020901000098

SAE Splines

ROTEX Hubs - Part numbers by product size and standard material										
Teeth	Pitch	SAE	Major Diameter	Minor Diameter	Shaft Diameter	48	55	65	75	90
						Steel				
13	16/32	B	0.901	0.754	0.875	BA020485042201	BA020555042201			
15	16/32	BB	1.026	0.877	1.000	BA020485042601	BA020555042601			
14	12/24	C	1.283	1.087	1.250	BA020485043201	BA020555043201	BA020655043201		
21	16/32		1.401	1.250	1.375	BA020485043501	BA020555043501	BA020655043503		
17	12/24	CC	1.533	1.334	1.500	BA020485043801	BA020555043801	BA020655043801	BA020755043801	
23	16/32		1.526	1.375	1.500	BA020485043802	BA020555043802	BA020655043803	BA020755043804	
13	8/16	D, E	1.798	1.506	1.750	BA020485044501	BA020555044501	BA020655044501	BA020755044501	BA020905044501
15	8/16	F	2.048	1.753	2.000		BA020555045201	BA020655045201	BA020755045201	BA020905045201

All hubs supplied standard with cross clamp
Additonal splines available. Consult KTR Engineering

Shaft coupling standard design – cast materials

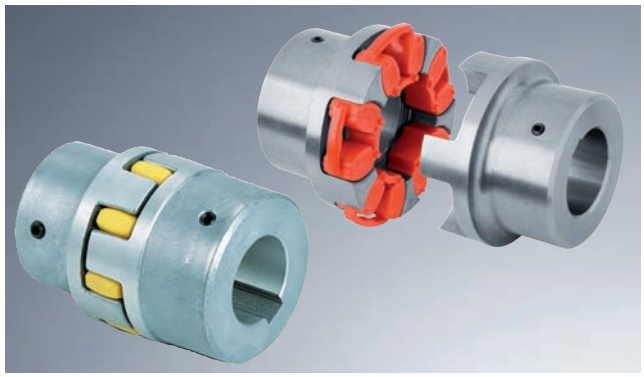

- Failsafe, reduced maintenance, blind assembly
- Torsionally flexible / vibration-damping
- Machined jaws - good dynamic properties and reduced spider wear
- Low weight cast aluminum hubs up to size 28
- Cast and nodular iron hubs from size 38 up to size 180
- Ex Certified to EC Standard 94/9/EC (Cast and Nodular Iron materials)
- Installation instructions available at www.ktr.com

Components

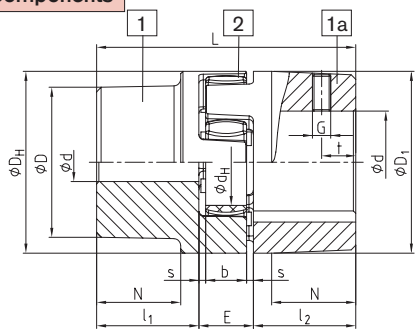

AL-D (thread on the keyway)

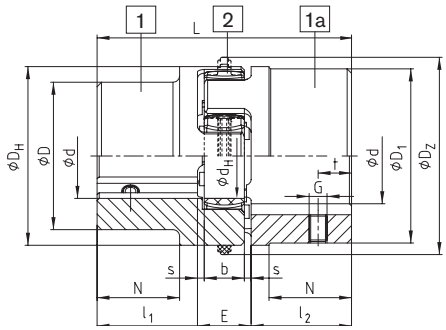

EN-GJL-250 / EN-GJS-400-15 (thread on the keyway)

Spider
as hardness 92 Sh-A and 95/98 Sh-A standard from size 14 - 100 and 64 Sh-D size 14 - 180

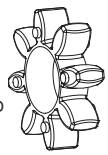

NEW

elements DZ (double tooth elements)
as hardness 92 Sh-A and 95 Sh-A standard from size 110 - 180

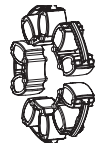

ROTEX® Aluminium Diecast (Al-D)

Size	Component	Spider (part 2) [1] Rated torque [lb-in] 92 Sh A	98 Sh A	64 Sh D	Bore Ød (min-max)	Dimensions [in] General L	l_1; l_2	E	b	s	D_H	D_Z	d_H	D; D_1	N	Setscrews G	t	T_A [lb-in]
14	1a	66	110	-	0.250 - 0.625	1.38	0.43	0.51	0.39	0.06	1.18	-	0.39	1.18	-	M4	0.20	13
19	1	89	150	-	0.250 - 0.750	2.60	0.98	0.63	0.47	0.08	1.61	-	0.71	1.26	0.79	M5	0.39	18
	1a				0.750 - 0.938									1.61				
24	1	300	530	-	0.375 - 0.938	3.07	1.18	0.71	0.55	0.08	2.20	-	1.06	1.57	0.79	M5	0.39	18
	1a				0.875 - 1.125									2.20				
28	1	840	1,410	-	0.438 - 1.125	3.54	1.38	0.79	0.59	0.10	2.60	-	1.18	1.89	1.10	M8	0.59	89
	1a				1.125 - 1.438									2.60				

ROTEX® Cast iron EN-GJL-250 (GG 25)

38	1	1,680	2,870	3,580	0.500 - 1.500	4.49	1.77	0.94	0.71	0.12	3.15	-	1.50	2.60	1.46	M8	0.59	89
	1a				1.500 - 1.813									3.07				
	1b				0.500 - 1.813	6.46	2.76								2.44			
42	1	2,340	3,980	4,950	0.563 - 1.688	4.96	1.97	1.02	0.79	0.12	3.74	-	1.81	2.95	1.57	M8	0.59	89
	1a				1.688 - 2.125									3.70				
	1b				0.563 - 2.125	6.93	2.95								2.56			
48	1	2,740	4,640	5,790	0.625 - 2.000	5.51	2.20	1.10	0.83	0.14	4.13	-	2.01	3.35	1.77	M8	0.59	89
	1a				1.938 - 2.375									4.09				
	1b				0.625 - 2.375	7.40	3.15								2.72			
55	1	3,620	6,060	7,300	0.813 - 2.313	6.30	2.56	1.18	0.87	0.16	4.72	-	2.36	3.86	2.05	M10	0.79	150
	1a				2.188 - 2.813									4.65				
65	1	5,530	8,310	10,390	0.875 - 2.625	7.28	2.95	1.38	1.02	0.18	5.31	-	2.68	4.53	2.40	M10	0.79	150
75	1	11,320	16,990	21,240	1.188 - 3.000	8.27	3.35	1.57	1.18	0.20	6.30	-	3.15	5.31	2.72	M10	0.98	150
90	1	21,240	31,860	39,820	1.625 - 3.750	9.65	3.94	1.77	1.34	0.22	7.87	8.58	3.94	6.30	3.19	M12	1.18	354

ROTEX® Nodular iron EN-GJS-400-15 (GGG 40)

100	1	29,200	43,800	54,730	2.000 - 4.375	10.63	4.33	1.97	1.50	0.24	8.86	9.69	4.45	7.09	3.50	M12	1.18	354
110	1	42,480	63,720	79,650	2.375 - 4.813	11.61	4.72	2.17	1.65	0.26	10.04	10.87	5.00	7.87	3.78	M16	1.38	708
125	1	58,850	88,500	110,620	2.375 - 5.563	13.39	5.51	2.36	1.81	0.28	11.42	12.40	5.79	9.06	4.41	M16	1.57	708
140	1	75,660	113,280	141,600	2.375 - 6.188	14.76	6.10	2.56	1.97	0.30	12.60	13.58	6.50	10.04	4.88	M20	1.77	1,239
160	1	113,280	169,920	212,400	3.188 - 7.125	16.73	6.89	2.95	2.24	0.35	14.57	15.75	7.48	11.42	5.51	M20	1.97	1,239
180	1	165,050	247,800	309,750	3.375 - 7.688	18.70	7.68	3.35	2.52	0.41	16.54	17.72	8.66	12.80	6.14	M20	1.97	1,239

= If material is not specified on the order, the selection/order will be based on the standard material listed above
1) Maximum torque of the coupling $TK_{max.}$ = rated torque of the coupling T_{KN} x 2
2) Material Al-H (machined aluminum).
Inch bores machined to AGMA Class 1, Metric bores machined to H7

Shaft coupling standard design – steel materials

- Failsafe, reduced maintenance, blind assembly
- Torsionally flexible / vibration-damping
- Machined jaws - good dynamic properties and reduced spider wear
- Steel hubs, for high shock applications, (e.g. steel mills, elevator drives, spline hubs, etc.)
- Ex Certified to EC Standard 94/9/EC
- Installation instructions available at www.ktr.com

Components

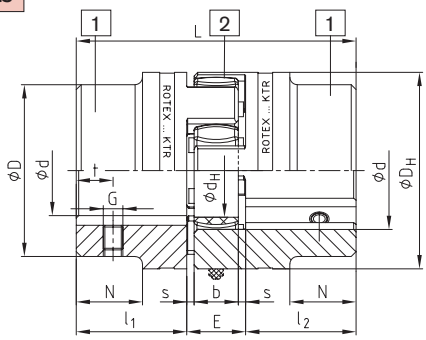

Steel (thread on the keyway)

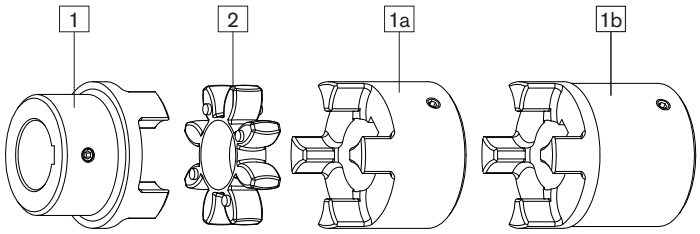

ROTEX® steel

Size	Component	Spider (part 2) [1] Rated torque [lb-in] 92 Sh A	98Sh A	64 Sh D	Dimensions [in] Bore Ød (min-max)	General L	l_1; l_2	E	b	s	D_H	d_H	D	N	Setscrews G	t	T_A [lb-in]
14	1a	66	110	-	0.625	1.38	0.43	0.51	0.39	0.06	1.18	0.39	1.18	-	M4	0.20	13
	1b					1.97	0.73										
19	1a	89	150	-	1.000	2.60	0.98	0.63	0.47	0.08	1.57	0.71	1.57	-	M5	0.39	18
	1b					3.54	1.46										
24	1a	300	530	-	1.313	3.07	1.18	0.71	0.55	0.08	2.17	1.06	2.17	-	M5	0.39	18
	1b					4.65	1.97										
28	1a	840	1,410	-	1.500	3.54	1.38	0.79	0.59	0.10	2.56	1.18	2.56	-	M8	0.59	89
	1b					5.51	2.36										
38	1	1,680	2,870	3,580	1.813	4.49	1.77	0.94	0.71	0.12	3.15	1.50	2.76	1.06	M8	0.59	89
	1b					6.46	2.76						3.15	-			
42	1	2,340	3,980	4,950	2.125	4.96	1.97	1.02	0.79	0.12	3.74	1.81	3.35	1.10	M8	0.59	89
	1b					6.93	2.95						3.74	-			
48	1	2,740	4,640	5,790	2.375	5.51	2.20	1.10	0.83	0.14	4.13	2.01	3.74	1.26	M8	0.59	89
	1b					7.40	3.15						4.13	-			
55	1	3,620	6,060	7,300	2.813	6.30	2.56	1.18	0.87	0.16	4.72	2.36	4.33	1.46	M10	0.79	150
	1b					8.27	3.54						4.72	-			
65	1	5,530	8,310	10,390	3.000	7.28	2.95	1.38	1.02	0.18	5.31	2.68	4.53	1.85	M10	0.79	150
	1b					9.25	3.94						5.31	-			
75	1	11,320	16,990	21,240	3.625	8.27	3.35	1.57	1.18	0.20	6.30	3.15	5.31	2.09	M10	0.79	150
	1b					10.24	4.33						6.30	-			
90	1	21,240	31,860	39,820	4.250	9.65	3.94	1.77	1.34	0.22	7.87	3.94	6.30	2.44	M12	1.18	354
	1b					11.61	4.92						7.87	-			

ROTEX® sintered steel

Size	Component	Spider (part 2) [1] Rated torque [lb-in] 92 Sh-A	98 Sh-A	Dimensions [in] Bore Ød	General L	l_1; l_2	E	b	s	D_H	d_H	D	N	Setscrews G	t	T_A [lb-in]
14	1a	66	111	unbored	1.38	0.43	0.51	0.39	0.06	1.18	0.39	1.18	-	M4	0.20	13
19	1a	89	150	unbored / .500 / .625 / .750 /	2.60	0.98	0.63	0.47	0.08	1.57	0.71	1.57	-	M5	0.39	18

= If material is not specified on the order, the selection/order will be based on the standard material listed above

[1] Maximum torque of the coupling $TK_{max.}$ = rated torque of the coupling T_{KN} x 2

Inch bores machined to AGMA Class 1, Metric bores machined to H7

- ROTEX® 19 – 48 stainless steel are available
- ROTEX® 19, 28 and 42 – hub material X10CrNiS 18-9 standard number 1.4305 (V2A) DIN 17440
- ROTEX® 24, 38 and 48 – hub material X6CrNiMoTi17-12-2 standard number 1.4571 (V4A) DIN 17440

Order form:

ROTEX®-38	St	92	1 – Ø 45	1 – Ø 25
Coupling size	Material	Spider hardness Shore A]	Hub design / Bore	Hub design / Bore

Clamping ring hubs

Same advantages as the standard ROTEX®:

- Integrated frictional clamping design
- High frictional torque capacity
- Easy installation with fasteners in the jaw pocket
- Ex Certified to EC Standard 94/9/EC (review the selection for Ex explosion protection use)
- Installation instructions available at www.ktr.com

Components

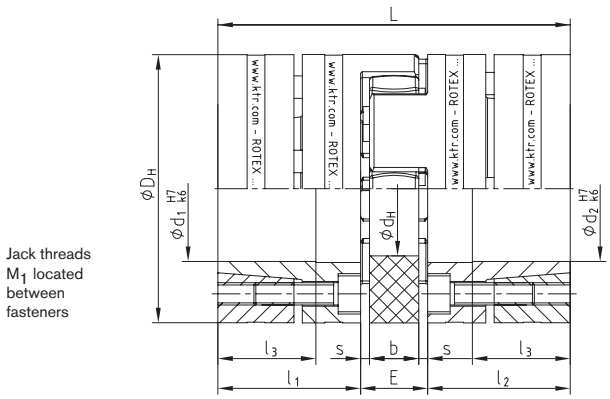

Inch bores machined to AGMA Class 1, Metric bores machined to H7 or G7 if greater than 55mm

Size	Torques [lb-in] 1)				Dimensions [in]								Fasteners				Weight per hub with max. bore [lbs]	Mass moment of inertia per hub with max. bore [x10³ lb-in sec²]
	92 Sh A		98 Sh A															
	T_{KN}	T_{Kmax}	T_{KN}	T_{Kmax}	D_H 3)	d_H	L	l_1; l_2	l_3	E	b	s	M	Quantity z	T_A [lb-in]	M_1		
Hub and clamping ring material – Steel (St-H)																		
19	89	170	150	300	1.57	0.71	2.60	0.98	0.71	0.63	0.47	0.08	M4	6	36	M4	0.39	0.389
24	300	610	530	1,060	2.17	1.06	3.07	1.18	0.87	0.71	0.55	0.08	M5	4	75	M5	0.88	1.690
28	840	1,680	1,410	2,830	2.56	1.18	3.54	1.38	1.06	0.79	0.59	0.10	M5	8	75	M5	1.31	3.699
38	1,680	3,360	2,870	5,750	3.15	1.50	4.49	1.77	1.38	0.94	0.71	0.12	M6	8	124	M6	2.70	11.42
42	2,340	4,690	3,980	7,960	3.74	1.81	4.96	1.97	1.38	1.02	0.79	0.12	M8	4	310	M8	5.07	28.05
48	2,740	5,480	4,640	9,290	4.13	2.01	5.51	2.20	1.61	1.10	0.83	0.14	M10	4	611	M10	6.79	46.02
55	3,310	6,630	6,060	12,120	4.72	2.36	6.30	2.56	1.77	1.18	0.87	0.16	M10	4	611	M10	10.3	91.16
65	-	-	8,310 2)	16,630 2)	5.31	2.68	7.28	2.95	2.17	1.38	1.02	0.18	M12	4	1,062	M12	14.8	169.0
75	-	-	16,990 2)	33,980 2)	6.30	3.15	8.27	3.35	2.48	1.57	1.18	0.20	M12	5	1,062	M12	21.8	351.2

1) Please note coupling selection on pages 121 and 122
2) Figures for 95 Sh A – GS
3) Add 0.08 in to $ØD_H$ at higher speeds for expansion of spider
Inch bores machined to AGMA Class 1, Metric bores machined to H7

Bores Ød1/Ød2 and the corresponding transmittable friction torques T_R of clamping ring hub in [lb-in] 1)

Size	0.375	0.438	0.500	0.625	0.750	0.875	1.000	1.125	1.250	1.375	1.500	1.625	1.750	1.875	2.000	2.125	2.250	2.375	2.500	2.625	2.750	3.125
19	280	335	417	499	668																	
24	283	340	432	513	702	738	970															
28				1,180	1,530	1,680	2,090	2,330	2,540	3,350	3,150											
38				1,700	2,180	2,420	2,980	3,280	3,530	4,150	4,090	4,810	4,950									
42						2,000	2,929	3,083	3,066	4,175	3,255	4,670	4,331	5,849	6,183							
48							4,630	5,950	5,930	7,440	6,610	8,470	8,330	10,320	8,950	11,000						
55									5,320	6,900	5,750	7,740	7,450	7,250	8,690	7,910	10,004	12,460	10,080	12,310	14,790	
65											9,140	11,760	11,610	11,560	13,470	12,710	15,520	18,690	15,970	18,910	22,160	
75													15,230	15,380	17,620	16,990	20,260	23,930	21,140	24,560	28,330	32,760

For transmittable torques of the clamping connection consider the max. tolerance to the shaft fit k6 / bore H7, from Ø55mm m6/G7. With bigger, shafts with larger tolerances the torque is reduced.
To calculate stiffness of the shaft/hollow shaft request KTR standard 45510

Order form:

ROTEX® GS 24	98 Sh A	6.0 – Ø 24		6.0 – Ø 20	
Coupling size	Spider hardness	Hub design	Bore	Hub design	Bore

Steel cross clamp hubs

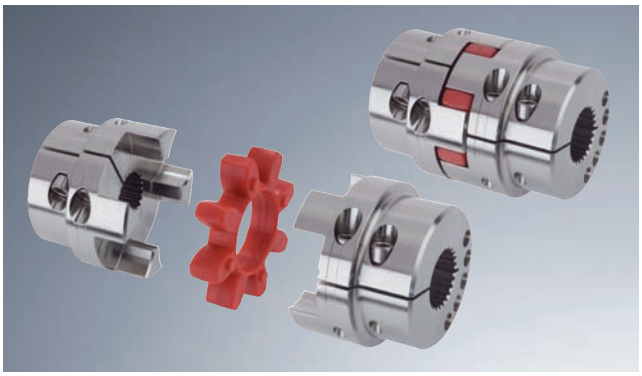

Same advantages as the standard ROTEX® in addition:

- Ideal clamping design for splined shafts
- Static balanced
- Suitable for reversing applications
- Ex certification to EU standard 94/9/EC (acceptable for hub designs 2.1 and 2.3, hub design 2.0 only to category 3)
- Installation instructions available at www.ktr.com

Components

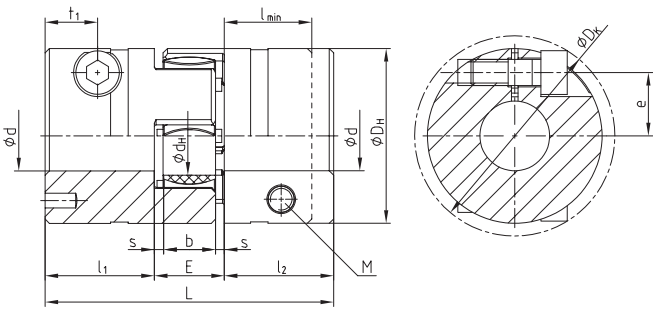

ROTEX® 19 - 28

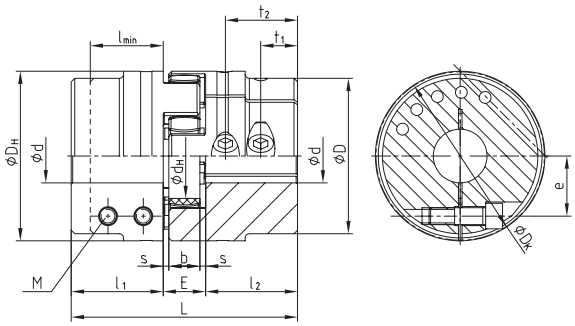

ROTEX® 38 - 90

ROTEX® with clamping hubs																
Size	Dimensions [in]															T_A [lb-in]
	$d_{max.}$	L	l_1;l_2	$l_{min.}$	E	b	s	D_H	D	d_H	M	D_K	t_1	t_2	e	
19	0.813 1)	2.60	0.98	0.79	0.63	0.47	0.08	1.57	-	0.71	M6	1.81	0.47	-	0.57	124
24	1.125	3.07	1.18	0.98	0.71	0.55	0.08	2.17	-	1.06	M6	2.26	0.47	-	0.79	124
28	1.438	3.54	1.38	1.18	0.79	0.59	0.10	2.56	-	1.18	M8	2.87	0.55 2)	-	0.98	310
38	1.563	4.49	1.77	1.38	0.94	0.71	0.12	3.15	2.76	1.50	M8	3.05	0.75	-	1.04	310
42	1.875	4.96	1.97	1.65	1.02	0.79	0.12	3.74	3.35	1.81	M10	3.68	0.71 2)	-	1.26	611
48	2.125	5.51	2.20	1.81	1.10	0.83	0.14	4.13	3.74	2.01	M12	4.13	0.83 2)	-	1.42	1,062
55	2.563	6.30	2.56	1.97	1.18	0.87	0.16	4.72	4.33	2.36	M12	4.70	1.02	2.01 2)	1.67 3)	1,062
65	2.625	7.28	2.95	2.17	1.38	1.02	0.18	5.31	4.53	2.68	M12	5.22	1.30	2.40 2)	1.97 3)	1,062
75	3.000	8.27	3.35	2.56	1.57	1.18	0.20	6.30	5.31	3.15	M16	6.22	1.42	2.68 2)	2.24 3)	2,611
90	3.438	9.65	3.94	3.15	1.77	1.34	0.22	7.87	6.30	3.94	M20	7.76	1.57	3.15 2)	2.83 3)	5,133

Bore Ød and the corresponding transmittable friction torques [lb-in] of ROTEX® clamping design 2.0																										
Size	0.313	0.375	0.500	0.625	0.750	0.875	1.000	1.125	1.250	1.375	1.500	1.625	1.750	1.875	2.000	2.125	2.250	2.375	2.500	2.625	2.750	2.875	3.000	3.125	3.250	3.375	3.500
19	352	384	415	447	478																						
24		493	525	556	588	620	651																				
28			1,207	1,268	1,329	1,390	1,451	1,512	1,574	1,635	1,696																
38			1,265	1,326	1,387	1,448	1,509	1,570	1,631	1,692	1,754	1,815															
42					2,547	2,644	2,741	2,839	2,936	3,034	3,131	3,228	3,326	3,423													
48							4,364	4,506	4,648	4,791	4,933	5,075	5,217	5,360	5,502	5,644											
55								5,089	5,231	5,373	5,515	5,658	5,800	5,942	6,084	6,227	6,369	6,511	6,653	6,796							
65										6,045	6,187	6,330	6,472	6,614	6,756	6,899	7,041	7,183	7,325	7,468	7,610						
75												25,333	25,851	26,369	26,887	27,405	27,923	28,441	28,959	29,477	29,995	30,513	31,031	31,549			
90												46,301	47,094	47,887	48,681	49,474	50,268	51,061	51,855	52,648	53,442	54,235	55,028	55,822	56,615	57,409	58,202

1) With design 2.1 dmax. Ø.625 in
2) With reduced hubs the dimension t_1 varies or the number of fasteners changes from qty-2 to qty-1
3)) t_1 and t_2 have a different e dimensions
Inch bores machined to AGMA Class 1, Metric bores machined to H7

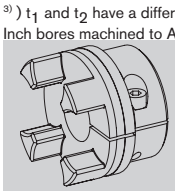

Design 2.0
clamping hub,
single slit,
without keyway

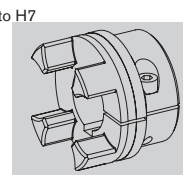

Design 2.1
clamping hub,
single slit,
with keyway

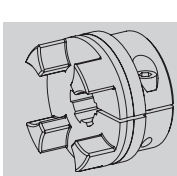

Design 2.3
clamping hub with spline

Order form:

ROTEX® 24	98 Sh-A	2.1 –	Ø 24	2.0 –	Ø 20
Coupling size	Spider hardness	Hub design	Bore	Hub design	Bore

Flange designs AFN and BFN

Same advantages as the standard ROTEX® in addition:

- Double flange design AFN and single flange design BFN
- Reduced maintenance, eliminates the need to move components (e.g. motor and pump)
- AFN design allows spider replacement while coupling is installed
- Flange component materials: 4N Steel
  3Na Nodular Iron
  EN-GJS-400-15 (GGG 40)
- Ex certified to EC Standard 94/9/EC
- Installation instructions available at www.ktr.com

Components

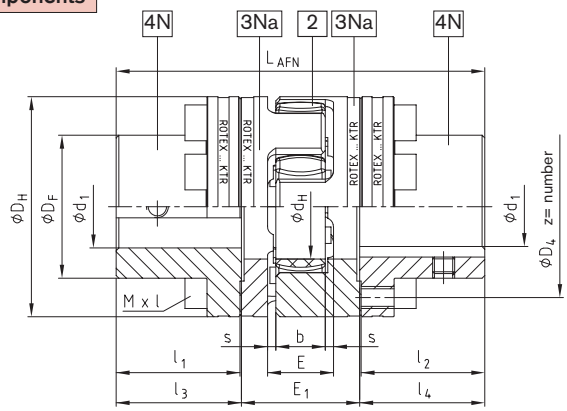

Design AFN

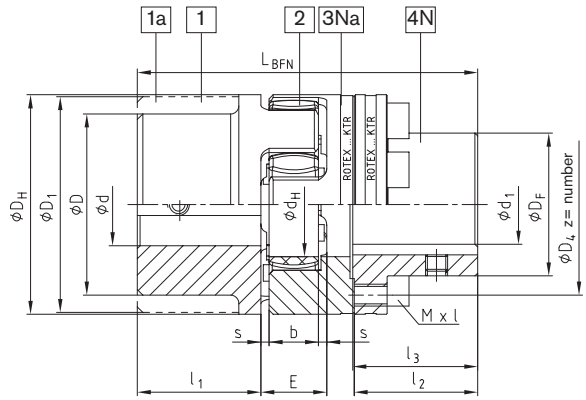

Design BFN

ROTEX® AFN (No. 002) and BFN (No. 004)																		
Size	Bore d; D; D_1	Component 4N bore d_1	Dimensions [in]												Fasteners [3] DIN EN ISO 4762 - 12.9			
			D_H	D_F	D_4	d_H	l_1; l_2	E	E_1	s	b	l_3; l_4	L_{AFN}	L_{BFN}	Mxl	z	Pitch [2]	[1] T_A [lb-in]
24	Maximum bore size dependent on hub style and material, refer to design No. 001 for details	0.938	2.17	1.42	1.77	1.06	1.18	0.71	1.30	0.08	0.55	1.20	3.70	3.39	M5x16	8		89
28		1.125	2.56	1.65	2.13	1.18	1.38	0.79	1.54	0.10	0.59	1.40	4.33	3.94	M6x20	8	8x45°	150
38		1.438	3.15	2.05	2.60	1.50	1.77	0.94	1.69	0.12	0.71	1.79	5.28	4.88	M8x22	8		363
42		1.563	3.74	2.44	3.15	1.81	1.97	1.02	1.89	0.12	0.79	2.01	5.91	5.43	M8x25	12	16x22.5°	363
48		1.813	4.13	2.76	3.54	2.01	2.20	1.10	1.97	0.14	0.83	2.24	6.46	5.98	M8x25	12		363
55		2.125	4.72	3.15	4.02	2.36	2.56	1.18	2.36	0.16	0.87	2.60	7.56	6.93	M10x30	8	8x45°	735
65		2.500	5.31	3.70	4.57	2.68	2.95	1.38	2.56	0.18	1.02	2.99	8.54	7.91	M10x30	12	16x22.5°	735
75		2.813	6.30	4.25	5.35	3.15	3.35	1.57	2.95	0.20	1.18	3.41	9.76	9.02	M12x40	15		1,062
90		3.875	7.87	5.59	6.77	3.94	3.94	1.77	3.23	0.22	1.34	4.00	11.22	10.43	M16x40	15		2,611
100		4.250	8.86	6.22	7.68	4.45	4.33	1.97	3.82	0.24	1.50	4.39	12.60	11.61	M16x50	15		2,611
110		4.813	10.04	7.01	8.58	5.00	4.72	2.17	4.06	0.26	1.65	4.80	13.66	12.64	M20x50	15	20x18°	5,133
125		5.563	11.42	8.11	9.92	5.79	5.51	2.36	4.57	0.28	1.81	5.59	15.75	14.57	M20x60	15		5,133
140		6.375	12.60	9.25	11.10	6.50	6.10	2.56	5.04	0.30	1.97	6.20	17.44	16.10	M20x60	15		5,133
160		7.313	14.57	10.63	12.80	7.48	6.89	2.95	5.75	0.35	2.24	6.99	19.72	18.23	M24x70	15		8,850
180		8.500	16.54	12.40	14.76	8.66	7.68	3.35	6.26	0.41	2.52	7.80	21.85	20.28	M24x80	18	24x15°	8,850

[1] Fastener tightening torque T_A [lb in].
[2] Thread in drive flange between jaws.
[3] Coupling is shipped unassembled.
Inch bores machined to AGMA Class 1, Metric bores machined to H7

Order form

ROTEX® 38	AFN	92 Sh A	4N – Ø 38	4N – Ø 35
Coupling size	Type	Spider hardness	Component Bore	Component Bore

Drop-out center coupling design A-H

Same advantages as the standard ROTEX® in addition:

- Complete installation and removal using only 4 fasteners
- Reduced maintenance by not having to move components (e.g. motor and pump)
- Keyed and frictional hub combinations can be installed radially (dimension E_1 for design AFN = dimension E_1 for A-H)
- Ex certified to EC Standard 94/9/EC (design 7.8 clamping hub without key only to category 3)
- Installation instructions available at www.ktr.com

Components

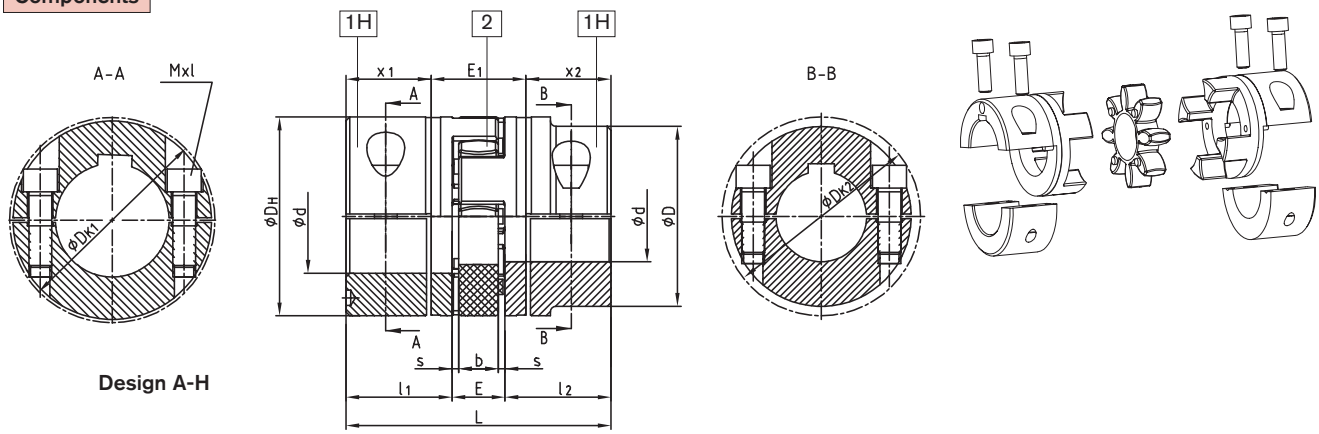

Design A-H

ROTEX® Design A-H															
Size	Component	Bore $Ød_{max.}$ [in]	Dimension [in]											Fastener DIN EN ISO 4762	
			L	l_1; l_2	E	b	s	D_H	D	D_{K1}	D_{K2}	x_1/x_2	E_1	MxI	T_A [lb-in]
19	1H	0.813	2.60	0.98	0.63	0.47	0.08	1.57	-	1.81	-	0.69	1.22	M6x16	124
24	1H	1.125	3.07	1.18	0.71	0.55	0.08	2.17	-	2.26	-	0.89	1.30	M6x20	
28	1H	1.438	3.54	1.38	0.79	0.59	0.10	2.56	-	2.87	-	1.00	1.54	M8x25	310
38	1H	1.688	4.49	1.77	0.94	0.71	0.12	3.15	-	3.29	-	1.40	1.69	M8x30	
42	1H	1.875	4.96	1.97	1.02	0.79	0.12	3.74	3.35	-	3.68	1.54	1.89	M10x30	611
		2.125							-	3.82	-			M10x35	
48	1H	2.125	5.51	2.20	1.10	0.83	0.14	4.13	3.74	-	4.13	1.77	1.97	M12x35	1,062
		2.313							-	4.27	0.00			M12x40	
55	1H	2.500	6.30	2.56	1.18	0.87	0.16	4.72	4.33	-	4.70	1.97	2.36	M12x40	1,062
		2.625							-	4.80	-			M12x45	
65	1H	2.625	7.28	2.95	1.38	1.02	0.18	5.31	4.53	-	4.86	2.36	2.56	M12x40	1,062
		3.000							-	5.22	-			M12x45	
75	1H	3.000	8.27	3.35	1.57	1.18	0.20	6.30	5.31	-	5.81	2.66	2.95	M16x50	2,611
		3.438							-	6.22	-				
90	1H	3.438	9.65	3.94	1.77	1.34	0.22	7.87	6.30	-	6.93	3.21	3.23	M20x60	5,133
		4.250							-	7.76	-				
100 1)	1H	4.250	10.63	4.33	1.97	1.50	0.24	8.86	7.09	-	7.30	3.31	4.02	M16x50	2,611
110 1)	1H	4.625	11.61	4.72	2.17	1.65	0.26	10.04	7.87	-	8.19	3.54	4.69	M20x60	5,133
125 1)	1H	5.375	13.39	5.51	2.36	1.81	0.28	11.42	9.06	-	9.55	4.13	5.12	M24x70	8,850

With maximum bore the keyways are offset by approx. 5°.

Hub materials: up to size 90 S355J2G3
from size 100 EN-GJS-400-15

1) From size 100: 4 fasteners for each clamping hub.
Inch bores machined to AGMA Class 1, Metric bores machined to H7

Order form

ROTEX® 38	A-H	98 Sh A	1H –	Ø 38	1H –	Ø 30
Coupling size	Design	Spider hardness	Component	Bore	Component	Bore

Flange designs CF, CFN, DF and DFN

Same advantages as the standard ROTEX® in addition:

- CF and CFN - flange to shaft connection
- DF and DFN - double flange design, allows radial installation without moving components
- CFN and DFN - small outside diameters
- DF and DFN – compact design
- Flange material part 3b: Nodular Iron EN-GJS-400-15 (GGG 40)
- Ex certified to EC Standard 94/9/EC
- Installation instructions available at www.ktr.com

Components

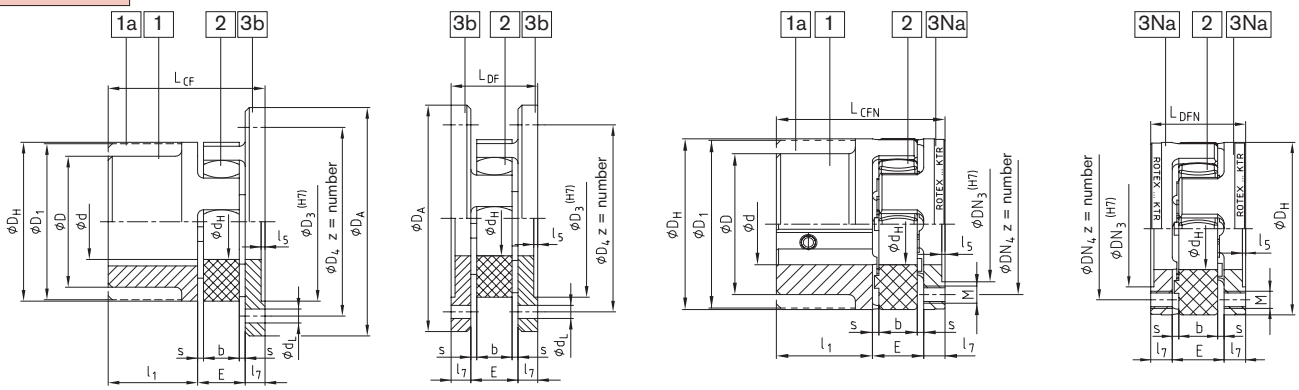

Design CF **Design DF** **Design CFN** **Design DFN**

ROTEX® CF; CFN (No. 005) and DF; DFN (No. 006)																							
Size	Ød / D / D1	General dimension (in)								Dimensions CF and DF (in)							Dimensions CFN and DFN (in)						
		D_H	d_H	l_1	E	s	b	l_5	l_7	D_A	D_3	D_4	z	d_L	L_{CF}	L_{DF}	DN_3	DN_4	M	z	Pitch [2]	L_{CFN}	L_{DFN}
24	Maximum bore size dependent on hub style and material, refer to design No. 001 for details	2.17	1.06	1.18	0.71	0.08	0.55	0.06	0.31	3.15	2.17	2.56	0.20	0.18	2.20	1.34	1.42	1.77	M5	8		2.20	1.34
28		2.56	1.18	1.38	0.79	0.10	0.59	0.06	0.39	3.94	2.56	3.15	0.24	0.26	2.56	1.57	1.73	2.13	M6		8x45°	2.56	1.57
38		3.15	1.50	1.77	0.94	0.12	0.71	0.06	0.39	4.53	3.15	3.74	0.24	0.26	3.11	1.73	2.13	2.60	M8			3.11	1.73
42		3.74	1.81	1.97	1.02	0.12	0.79	0.08	0.47	5.51	3.74	4.53	0.24	0.35	3.46	1.97	2.56	3.15	M8	12	16x22.5°	3.46	1.97
48		4.13	2.01	2.20	1.10	0.14	0.83	0.08	0.47	5.91	4.13	4.92	0.31	0.35	3.78	2.05	2.95	3.54	M8			3.78	2.05
55		4.72	2.36	2.56	1.18	0.16	0.87	0.08	0.63	6.89	4.72	5.71	0.31	0.43	4.37	2.44	3.31	4.02	M10	8	8x45°	4.37	2.44
65		5.31	2.68	2.95	1.38	0.18	1.02	0.08	0.63	7.48	5.31	6.30	0.39	0.43	4.96	2.64	3.78	4.57	M10	12	16x22.5°	4.96	2.64
75		6.30	3.15	3.35	1.57	0.20	1.18	0.10	0.75	8.46	6.30	7.28	0.39	0.53	5.67	3.07	4.41	5.35	M12	15		5.67	3.07
90		7.87	3.94	3.94	1.77	0.22	1.34	0.12	0.79	10.24	7.87	8.86	0.47	0.53	6.50	3.35	5.71	6.77	M16			6.50	3.35
100		8.86	4.45	4.33	1.97	0.24	1.50	0.16	0.98	11.22	8.86	9.84	0.47	0.53	7.28	3.94	6.50	7.68	M16			7.28	3.94
110		10.04	5.00	4.72	2.17	0.26	1.65	0.16	1.02	12.99	10.04	11.42	0.47	0.71	7.91	4.21	7.09	8.58	M20		20x18°	7.91	4.21
125		11.42	5.79	5.51	2.36	0.28	1.81	0.20	1.18	14.57	11.42	12.80	0.63	0.71	9.06	4.72	8.46	9.92	M20			9.06	4.72
140		12.60	6.50	6.10	2.56	0.30	1.97	0.20	1.34	16.14	12.60	14.17	0.63	0.87	10.00	5.24	9.65	11.10	M20			10.00	5.24
160		14.57	7.48	6.89	2.95	0.35	2.24	0.20	1.50	18.11	14.57	16.14	0.63	0.87	11.34	5.94	11.02	12.80	M24			11.34	5.94
180		16.54	8.66	7.68	3.35	0.41	2.52	0.22	1.57	20.47	16.54	18.31	0.63	1.02	12.60	6.50	12.99	14.76	M24	18	24x15°	12.60	6.50

See Page 34 for additional flange dimensions
Inch bores machined to AGMA Class 1, Metric bores machined to H7

Additional designs: ROTEX® CF-H
Drop-out center flange coupling

Please request sheet M412069

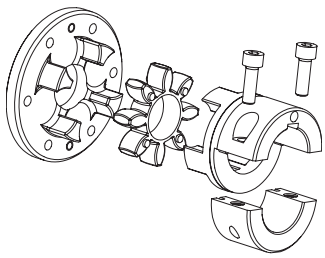

Order form:

ROTEX® 38	CF	92 Sh A	1 — EN-GJL-250 — Ø 20
Coupling size	Design	Spider hardness	Compo-nent material Bore

Double-cardanic spacer design ZS-DKM-H

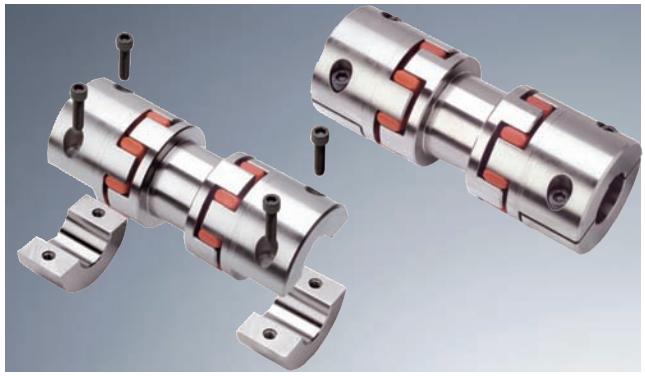

Same advantages as the standard ROTEX® in addition:

- Standard spacers up to 9.84" shaft gap
- Complete installation and removal using only 4 fasteners
- Accommodates high shaft misalignments while remaining torsionally symmetric
- Restoring forces are reduced to a minimum
- Ex Certified to EC Standard 94/9/EC (design 7.5 clamping hub without key according to category 3)
- Installation instructions available at www.ktr.com

Components

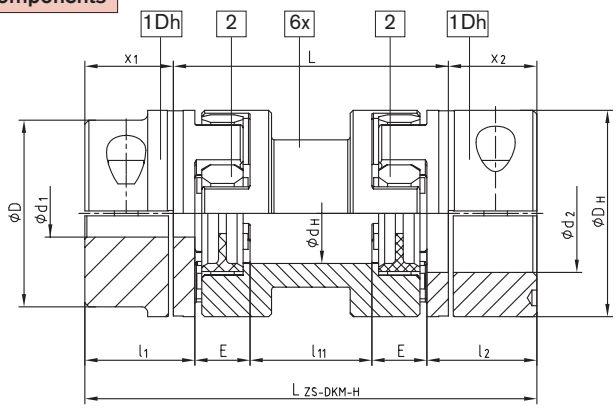

Design ZS-DKM-H

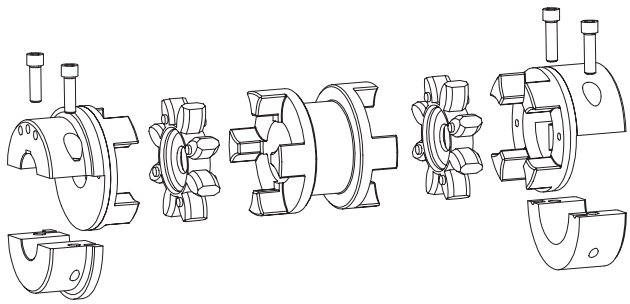

ROTEX® ZS-DKM-H																			
Size	DBSE L [in]	Bore. $Ød_1/d_2$ [in]	Spider (part 2) 1) T_{KN} [lb-in]	Dimensions [in]							Fastener DIN EN ISO 4762 – 12.9		Max. misalignments					Weight2) [lbs]
													Axial [in]	at n = 1800 rpm		at n = 3600 rpm		
				D_H	d_H	l_1; l_2	x_1; x_2	l_{11}	E	$L_{ZS-DKM-H}$	M	T_A [lb-in]		Parallel [in]	Angular [°]	Parallel [in]	Angular [°]	
24	3.94	1.125	300	2.17	1.06	1.18	0.89	1.93	0.71	5.71	M6	124	0.06	0.04	0.9	0.03	0.6	3.1
	5.51							3.50		7.28				0.07		0.04		3.5
28	3.94	1.438	840	2.56	1.18	1.38	1.00	1.61	0.79	5.94	M8	310	0.06	0.04		0.03		4.2
	5.51							3.19		7.52				0.06		0.04		4.9
38	3.94	1.688	1,680	3.15	1.50	1.77	1.40	1.30	0.94	6.73	M8	310	0.07	0.04		0.02		8.6
	5.51							2.87		8.31				0.06		0.04		9.0
42	3.94	2.125	2,340	3.74	1.81	1.97	1.54	1.02	1.02	7.01	M10	611	0.08	0.03		0.02		11
	5.51							2.60		8.58				0.06		0.04		13
48	3.94	2.313	2,740	4.13	2.01	2.20	1.77	0.87	1.10	7.48	M12	1,062	0.08	0.03		0.02		16
	5.51							2.44		9.06				0.06		0.04		17
	3.94							0.39		7.87				0.02		0.02		21
55	5.51	2.625	3,620	4.72	2.36	2.56	1.97	1.97	1.18	9.45	M12	1,062	0.09	0.05		0.03		25
	7.09							3.54		11.02				0.07		0.05		27
	7.87							4.33		11.81				0.09		0.06		28
65	5.51	3.000	5,530	5.31	2.68	2.95	2.36	1.57	1.38	10.24	M12	1,062	0.10	0.05		0.03		36
	7.09							3.15		11.81				0.07		0.05		37
	5.51							0.98		10.83				0.04		0.03		52
75	7.09	3.438	11,320	6.30	3.15	3.35	2.66	2.56	1.57	12.40	M16	2,611	0.12	0.06		0.04		57
	7.87							3.35		13.19				0.08		0.05		60
	9.84							5.31		15.16				0.11		0.07		65
90	7.09	4.250	21,240	7.87	3.94	3.94	3.21	2.09	1.77	13.50	M20	5,133	0.13	0.06		0.04		108
	9.84							4.84		16.26				0.10		0.07		116

1) Maximum torque of the coupling $TK_{max.}$ = rated torque of the coupling T_{KN} x 2
Size 24 to 75 spider type 95/98 Sh A-GS; at size 90 spider type 95 Sh A with inner ring
ZS-DKM-H: transmittable torque according to 92 Sh A-GS

2) Calculated to max. bore
Inch bores machined to AGMA Class 1, Metric bores machined to H7

NOTE: The standard is only for horizontal design. Vertical design on request.

Order form

ROTEX® 38	ZS-DKM-H	140	98 Sh A	∅38	∅30
Coupling size	Design	Shaft distance dimension L	Spider hardness	Bore	Bore

Double-cardanic spacer design DKM

Same advantages as the standard ROTEX® in addition:

- Greater shaft misalignments
- 3-part double cardanic design eliminating the need for bearing support
- Restoring forces are reduced to a minimum
- Ex certified to EC Standard 94/9/EC (Explosion Certificate ATEX 95)
- Installation instructions available at www.ktr.com

Components

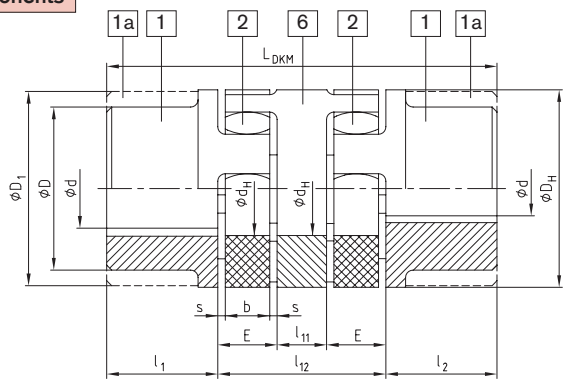

Design DKM

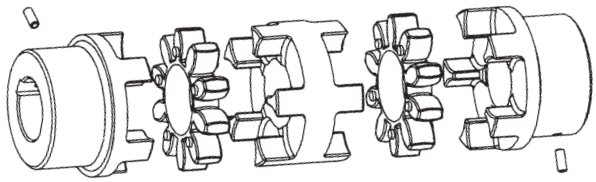

ROTEX® DKM (No. 018)															
Size	Ød ØD $ØD_1$	Spider (part 2) Nominal torque [lb-in]		Dimensions [in]									Max. misalignments at n = 1800 rpm		
		92 Sh-A	98 Sh-A	D_H	d_H	l_1; l_2	l_{11}	l_{12}	E	s	b	L_{DKM}	Parallel [in]	Angular [°]	Axial [in]
19	Maximum bore size dependent on hub style and material, refer to design No. 001 for details	89	150	1.57	0.71	0.98	0.39	1.65	0.63	0.08	0.47	3.62	0.02	0.9	+0.05/-0.04
24		300	530	2.17	1.06	1.18	0.63	2.05	0.71	0.08	0.55	4.41	0.02	0.9	+0.06/-0.04
28		840	1,410	2.56	1.18	1.38	0.71	2.28	0.79	0.10	0.59	5.04	0.02	0.9	+0.06/-0.06
38		1,680	2,870	3.15	1.50	1.77	0.79	2.68	0.94	0.12	0.71	6.22	0.03	0.9	+0.07/-0.06
42		2,340	3,980	3.74	1.81	1.97	0.87	2.91	1.02	0.12	0.79	6.85	0.03	0.9	+0.08/-0.08
48		2,740	4,640	4.13	2.01	2.20	0.94	3.15	1.10	0.14	0.83	7.56	0.03	0.9	+0.08/-0.08
55		3,620	6,060	4.72	2.36	2.56	1.10	3.46	1.18	0.16	0.87	8.58	0.04	0.9	+0.09/-0.08
65		5,530	8,310	5.31	2.68	2.95	1.26	4.02	1.38	0.18	1.02	9.92	0.04	0.9	+0.10/-0.08
75		11,320	16,990	6.30	3.15	3.35	1.42	4.57	1.57	0.20	1.18	11.26	0.05	0.9	+0.12/-0.12
90		21,240	31,860	7.87	3.94	3.94	1.57	5.12	1.77	0.22	1.34	12.99	0.05	0.9	+0.13/-0.12

Inch bores machined to AGMA Class 1, Metric bores machined to H7

Additional design: ZS-DKM1

Please request sheet M369832.

Order form:

ROTEX® 38	DKM	EN-GJL-250	98 Sh A	1 —	Ø 38	1 —	Ø 30
Coupling size	Design	Material	Spider hardness	Comp-onent	Bore	Comp-onent	Bore

Intermediate shaft design ZWN and ZR

Same advantages as the standard ROTEX® in addition:

- Connects applications with large shaft gaps
- Compensates for greater parallel misalignments
- Allows radial installation without moving components
- ZWN style – bearing supported intermediate shaft
- ZR style – intermediate shaft coupling with the GS spider can be removed radially
- Installation instructions available at www.ktr.com

Components

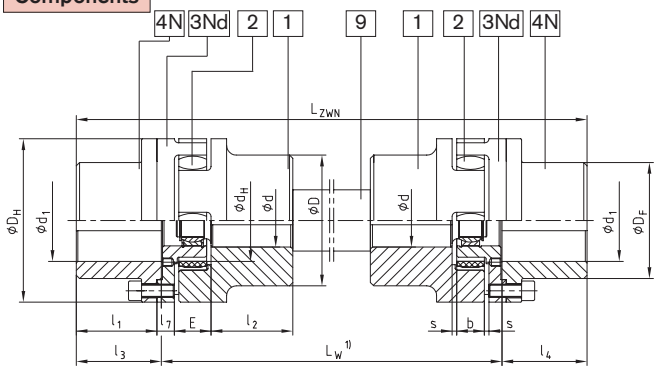

Design ZWN

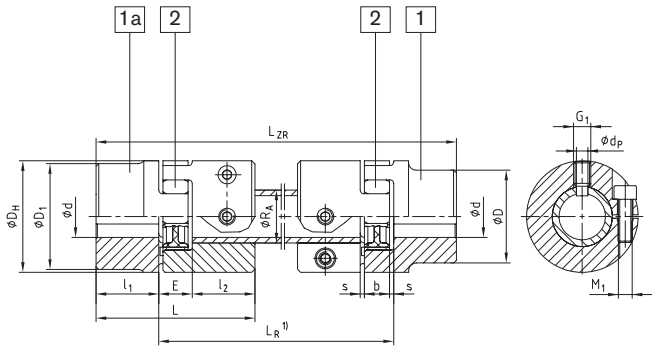

Design ZR with GS spider

ROTEX® ZWN (Nr. 017) and ZR (Nr. 037)

Size	Bore Ød ØD ØD1	Dimensions of ZWN and ZR (in): Component 4N [St] bore Ød1max	Materials see page 46: D_H	D_F	d_H	l_1; l_2	E	s	b	l_3; l_4	l_7	L_{ZWN}	Dimensions for ZR (in): Tube: R_A	$C^{2)}$ lb-ft²/rad	Fastener: M_1	T_A [lb-in]		L	Dog point setscrew G_1	Dog Point d_P [in]	Axial misalignment [in]	Angular misalignment [degrees]
19[3]	Maximum bore size dependent on hub style and material, refer to design No. 001 for details	—	1.57	—	0.71	0.98	0.63	0.08	0.47	—	—	—	3/4x11GA	520	M6	124		2.60	M6	0.16	0.05	0.9
24		0.938	2.17	1.42	1.06	1.18	0.71	0.08	0.55	1.20	0.31		1x5/32	2,463	M6	124		3.07	M8	0.22	0.06	0.9
28		1.125	2.56	1.65	1.18	1.38	0.79	0.10	0.59	1.40	0.39		1-3/8x5/32	4,145	M8	310		3.54	M10	0.28	0.06	0.9
38		1.438	3.15	2.05	1.50	1.77	0.94	0.12	0.71	1.79	0.39		1-5/8x5/32	6,464	M8	221		4.49	M12	0.33	0.07	0.9
42		1.563	3.74	2.44	1.81	1.97	1.02	0.12	0.79	2.01	0.47	$L_{ZWN} = L_W + 2 \cdot l_3$	1-3/4x5/32	9,523	M10	434	$L_{ZR} = L_R + 2 \cdot l_1$	4.96	M12	0.33	0.08	0.9
48		1.813	4.13	2.76	2.01	2.20	1.10	0.14	0.83	2.24	0.47		2x5/32	13,423	M12	761		5.51	M16	0.47	0.08	0.9
55		2.125	4.72	3.15	2.36	2.56	1.18	0.16	0.87	2.60	0.63		2-1/8x5/32	21,600	M12	1,062		6.30	M16	0.47	0.09	0.9
65		2.500	5.31	3.70	2.68	2.95	1.38	0.18	1.02	2.99	0.63		2-1/2x3/16	37,212	M12	1,062		7.28	M16	0.47	0.10	0.9
75		2.813	6.30	4.25	3.15	3.35	1.57	0.20	1.18	3.41	0.75		3x3/16	58,817	M16	2,611		8.27	M16	0.47	0.12	0.9
90		3.875	7.87	5.59	3.94	3.94	1.77	0.22	1.34	4.00	0.79											
100		4.250	8.86	6.22	4.45	4.33	1.97	0.24	1.50	4.39	0.98											
110		4.813	10.04	7.01	5.00	4.72	2.17	0.26	1.65	4.80	1.02											
125		5.563	11.42	8.11	5.79	5.51	2.36	0.28	1.81	5.59	1.18											

Selection indication for design ZR:

- Transmittable torques of keyless clamping hubs have to be observed. Please order dimension sheet no. 5020/000/017–757537.
- Material on request.

1)) Please provide the shaft distance dimension L_W or L_R in all inquiries and orders along with the maximum speed to review the critical whipping speed.
2) Torsion spring stiffness when the intermediate tube is 39 in
3) Design ZR
Inch bores machined to AGMA Class 1, Metric bores machined to H7

Design ZWNV - for vertical assembly with thrust bearing, please request sheet 5020/000/027-760390.

Order form:

ROTEX® 38	ZWN	1200	St / EN-GJL-250	98 Sh A	4N —	Ø 38	4N —	Ø 30
Coupling size	Design	Shaft distance dim. L_W	Material	Spider hardness	Compo-nent	Bore	Compo-nent	Bore

Design BTAN with brake drum/design SBAN with brake disc

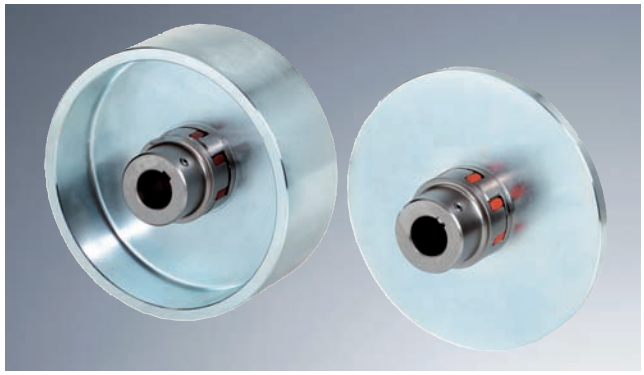

Same advantages as the standard ROTEX® in addition:

- Shaft coupling BTAN designed to be mounted to external brake drums with brake discs to DIN 5431/15435
- Shaft coupling BTAN with disc for brake calipers
- Each coupling design can be combined with several sizes of brake drums (see dimension "N")
- The brake drum or brake disc must be mounted onto the shaft with the highest mass moment of inertia
- The maximum brake torque must not exceed the maximum coupling torque
- Installation instructions available at www.ktr.com

Components

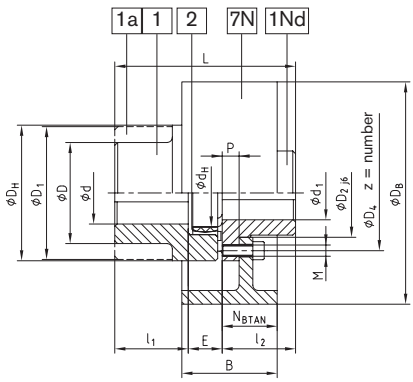

Brake drum design BTAN

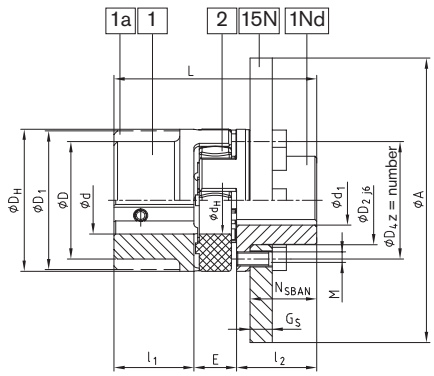

Disc brake design SBAN

ROTEX® type BTAN (No. 011) and SBAN (No. 013)																
Size	Pilot bore Ød; ØD ØD1	Bore max.d1		Dimensions [in]												
		EN-GJS-400-15	Steel	D_H	D_2	D_4	d_H	z	pitch [1]	M	T_A [lb-in]	l_1; l_2	E	L	P	N_{SBAN}
38	Maximum bore size dependent on hub style and material, refer to design No. 001 for details	—	1.313	3.15	1.97	2.60	1.50	8	8x45°	M8	363	1.77	0.94	4.49	0.30	1.48
42		—	1.563	3.74	2.36	3.15	1.81	12	16x22.5°	M8	363	1.97	1.02	4.96	0.37	1.59
48		—	1.813	4.13	2.68	3.54	2.01	12		M8	363	2.20	1.10	5.51	0.41	1.79
55		—	2.125	4.72	3.07	4.02	2.36	8	8x45°	M10	735	2.56	1.18	6.30	0.49	2.07
65		—	2.500	5.31	3.62	4.57	2.68	12	16x22.5°	M10	735	2.95	1.38	7.28	0.53	2.42
75		—	2.813	6.30	4.17	5.35	3.15	15		M12	1062	3.35	1.57	8.27	0.61	2.74
90		—	3.875	7.87	5.51	6.77	3.94	15		M16	2611	3.94	1.77	9.65	0.73	3.21
100		3.875	—	8.86	6.14	7.68	4.45	15	20x18°	M16	2611	4.33	1.97	10.63	0.81	3.52
110		4.250	—	10.04	6.93	8.58	5.00	15		M20	5133	4.72	2.17	11.61	0.93	3.80
125		5.000	—	11.42	8.03	9.92	5.79	15		M20	5133	5.51	2.36	13.39	1.08	4.43

[1] Thread in the hub between the jaws

Design BTAN												Design SBAN											
Brake drum	ROTEX® BTAN dimension „N_{BTAN}"										Speed rpm [V] (98 ft/s)	Brake Disc	ROTEX® SBAN coupling/disc brake dimension										Speed rpm [V] (98 ft/s)
	38	42	48	55	65	75	90	100	110	125			38	42	48	55	65	75	90	100	110	125	
160x60	1.22										3,550	200x12.5	x										2,800
200x75	1.42	1.50	1.54	1.61							2,800	250x12.5	x	x	x								2,240
250x95	1.73	1.81	1.85	1.93	1.97	2.05					2,240	315x16		x	x	x	x	x					1,800
315x118		2.17	2.20	2.28	2.32	2.40	2.52				1,800	400x16			x	x	x	x	x	x	x		1,400
400x150		2.68	2.72	2.80	2.83	2.91	3.03	3.11	3.23		1,400	500x16				x	x	x	x	x	x	x	1,120
500x190					3.43	3.50	3.62	3.70	3.82	3.98	1,120	630x20					x	x	x	x	x	x	900
630x236						4.21	4.33	4.41	4.53	4.69	900	710x20					x	x	x	x	x	x	800
710x265								4.84	4.96	5.12	800	800x25							x	x	x	x	710
800x300										5.67	710	900x25									x	x	630

Other sizes available, request sheets:
BTAN:M 380821
SBAN straight: M380822; offset: M370065
FNN hub: M380823

Inch bores machined to AGMA Class 1, Metric bores machined to H7

Order form:

ROTEX® 38	BTAN	∅200x75	92 Sh A	1Nd —	Ø 38	1 —	Ø 30
Coupling size	Design	∅Brake drum x witdh of brake drum	Spider hardness	Compo-nent	Bore	Compo-nent	Bore

Design AFN-SB special with brake disc

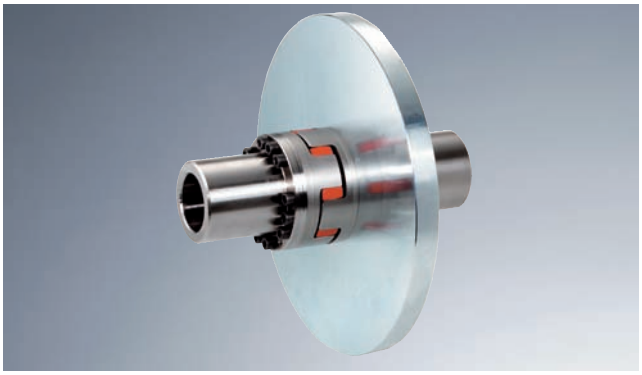

Same advantages as the standard ROTEX® in addition:

- Shaft coupling AFN-SB special with brake disc for brake calipers
- The brake disc must be mounted onto the shaft with the highest mass moment of inertia
- The maximum brake torque must not exceed the maximum coupling torque
- Installation instructions available at www.ktr.com

Components

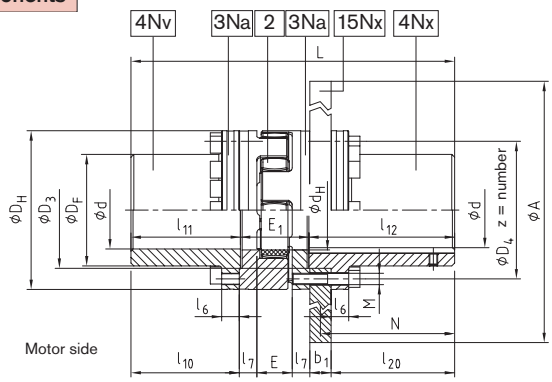

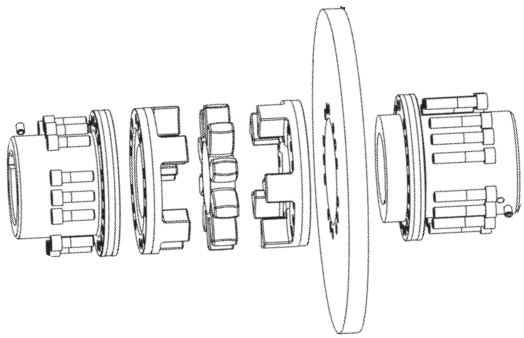

ROTEX® Design AFN-SB special													
Size	Bore Ød		Dimensions [in]										
	min.	max.	D_H	D_F	D_3 H7/h7	D_4	d_H	E	E_1	M	z	Pitch	T_A [lb-in]
65	0.875	2.500	5.31	3.70	3.78	4.57	2.68	1.38	2.56	M10	12	16x22,5°	730
75	1.188	2.813	6.30	4.25	4.41	5.35	3.15	1.57	2.95	M12	15		1,060
90	1.625	3.875	7.87	5.59	5.71	6.77	3.94	1.77	3.23	M16	15		2,610
100	1.813	4.250	8.86	6.22	6.50	7.68	4.45	1.97	3.82	M16	15		2,610
110	2.375	4.813	10.04	7.01	7.09	8.58	5.00	2.17	4.06	M20	15	20x18°	5,130
125	2.375	5.563	11.42	8.11	8.46	9.92	5.79	2.36	4.57	M20	15		5,130
140	2.375	6.375	12.60	9.25	9.65	11.10	6.50	2.56	5.04	M20	15		5,130
160	3.188	7.313	14.57	10.63	11.02	12.80	7.48	2.95	5.75	M24	15		8,850

ROTEX® Design AFN-SB special													
Size	Torque[1] w/ 95Sh-A		Max. speed [rpm]	Max.[1] brake torque [lb-in]	Dimensions [in]								
	T_{KN}	$T_{Kmax.}$			l_6	l_7	l_{10}	l_{11}	l_{12}	l_{20}	N	L
65	8,310	16,630	3,450	16,630	0.59	0.63	4.43	4.47	6.54	5.31	5.91	13.56
75	16,990	33,980	3,250	33,980	0.79	0.75	5.18	5.24	6.56	5.31	5.91	14.74
90	31,860	63,720	3,000	63,720	0.79	0.79	6.46	6.52	8.13	6.89	7.48	17.87
100	43,800	87,610	2,800	87,610	0.98	0.98	6.04	6.10	8.13	6.89	7.48	18.05
110	63,720	127,440	2,600	127,440	0.98	1.02	7.93	8.01	8.35	7.09	7.68	20.41
125	88,500	177,000	2,250	177,000	1.18	1.18	7.81	7.89	8.35	7.09	7.68	20.81
140	113,280	226,560	1,800	226,560	1.18	1.34	9.63	9.72	9.94	8.66 8.27 [2]	9.25 9.06 [2]	24.70
160	169,920	339,840	1,500	339,840	1.34	1.50	8.92	9.02	9.94	8.66 8.27 [2]	9.25 9.06 [2]	24.70

Selection of ROTEX® coupling/ brake disc											
Size	Brake disc ∅A x b_1										
	355x30	400x30	450x30	500x30	560x30	630x30	710x30	800x30	900x30	900x40	1000x40
65	x	x	x								
75		x	x	x							
90			x	x	x	x					
100				x	x	x					
110				x	x	x	x				
125						x	x	x			
140							x	x	x	x	x
160							x	x	x	x	x

[1] The max. braking torque must not exceed the maximum torque of the coupling.

[2] Dimensions for a brake disc width b_1 = 1.57 in.

Order form:

ROTEX® 90	AFN-SB special	∅450x30	95 Sh A	4Nv —	Ø 90	4Nx —	Ø 90
Coupling size	Design	∅Disc brake width of disc]	Spider Hardness	Compo-nent	Bore	Compo-nent	Bore

Design SD (shiftable at standstill)

Same advantages as the standard ROTEX® in addition:

- Shiftable coupling for all applications in general industry
- Easy to engage and disengage drive and driven at standstill
- Optional shiftable linkage kit available to ease installation
- Spring and ball detent locking mechanism
- Installation instructions available at www.ktr.com

Components

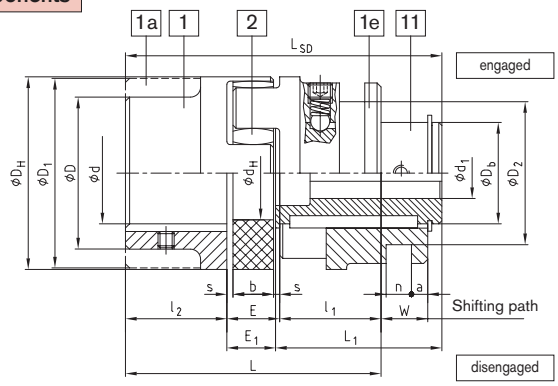

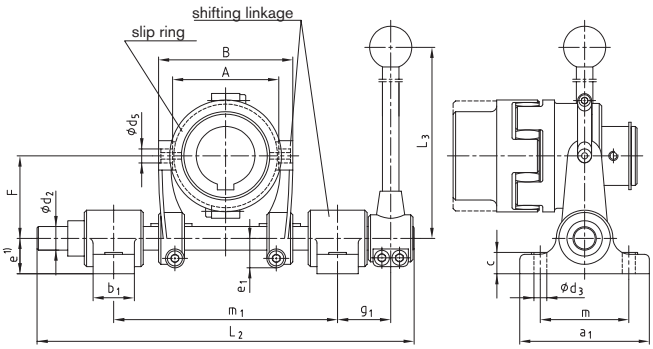

ROTEX® design SD (No. 015)

Size	∅d ∅D ∅D_1	Bore d_1 min.	Bore d_1 max.	D_H	D_2±0,1	D_b	d_H	l_1;l_2	E	s	b	E_1	L	L_1	W	a	n±0,1	L_{SD}	Shifting force set in [lbf]	Slip ring size	Shiftable linkage size
24	Maximum bore size dependent on hub style and material, refer to design No. 001 for details	0.375	0.688	2.17	1.61	1.18	1.06	1.18	0.71	0.08	0.55	0.65	3.07	2.03	0.63	0.24	0.24	3.86	25	—	—
28		0.438	0.875	2.56	2.28	1.42	1.18	1.38	0.79	0.10	0.59	0.71	3.54	2.36	0.69	0.31	0.31	4.45	29	—	—
38		0.500	1.125	3.15	2.78	1.77	1.50	1.77	0.94	0.12	0.71	0.87	4.49	2.87	0.83	0.31	0.49	5.51	34	1.1	1
42		0.563	1.250	3.74	2.78	1.97	1.81	1.97	1.02	0.12	0.79	0.94	4.96	3.23	0.91	0.31	0.49	6.14	41	1.1	1
48		0.625	1.500	4.13	3.52	2.36	2.01	2.20	1.10	0.14	0.83	1.00	5.51	3.56	0.96	0.24	0.69	6.77	45	2.2	2
55		0.750	1.813	4.72	4.43	2.76	2.36	2.56	1.18	0.16	0.87	1.06	6.30	4.06	1.02	0.24	0.71	7.68	56	3.3	3
65		0.813	2.125	5.31	4.43	3.15	2.68	2.95	1.38	0.18	1.02	1.26	7.28	4.72	1.20	0.28	0.71	8.94	63	3.3	3
75		1.000	2.500	6.30	5.14	3.74	3.15	3.35	1.57	0.20	1.18	1.46	8.27	5.31	1.38	0.24	0.81	10.12	79	4.4	3
90		1.125	2.813	7.87	6.48	4.33	3.94	3.94	1.77	0.22	1.34	1.61	9.65	5.98	1.56	0.31	1.00	11.54	79	5.5	4
100		1.188	3.000	8.86	6.48	4.53	4.45	4.33	1.97	0.24	1.50	1.81	10.63	6.65	1.73	0.55	1.00	12.80	86	5.5	4
110		1.438	3.250	10.04	6.48	4.92	5.00	4.72	2.17	0.26	1.65	2.03	11.61	7.24	1.91	0.73	1.00	13.98	101	5.5	4
125		1.625	3.875	11.42	8.29	5.71	5.79	5.51	2.36	0.28	1.81	2.19	13.39	8.21	2.09	0.73	1.20	15.91	113	6.6	5

slip ring and shiftable linkage

Size	Shiftable linkage size	a_1	b_1	c	d_2	d_3	d_5	$e^{1)}$	e_1	F	g_1	L_2	L_3	m	m_1 min.	m_1 max.	A	B	Max. speed n for slip ring [rpm]
38	1	4.33	1.38	0.71	0.79	0.43	0.47	1.18	0.98	2.76	2.17	12.60	15.75	2.95	7.09	7.48	3.54	4.49	3,280
42	1																		
48	2	5.51	1.57	0.98	0.98	0.53	0.67	1.57	1.06	3.84	2.36	16.93	17.72	3.94	9.45	10.63	4.37	5.94	2,550
55	3				1.18				1.28	4.72	2.76	19.29	23.62		11.02	12.20	5.51	7.09	2,120
65	3																		
75	3																6.69	8.27	1,710
90	4	6.30	1.77		1.38		0.83	1.97	1.48	5.81	2.76	22.24	29.53	4.72	12.64	14.37	7.87	9.61	1,360
100	4																		
110	4																		
125	5				1.57		0.98		1.81	7.48	3.15	24.80	42.05		14.37	16.14	9.84	11.81	855

[1] In case of a extended base plate the dimension "e" of the shiftable linkage size 5 has to be increased by at least 0.4 in.

Inch bores machined to AGMA Class 1, Metric bores machined to H7

Order form:

ROTEX® 38	SD	with 1,1 and 1	92 Sh A	1 —	Ø 38	11 —	Ø 28
Coupling size	Design	with slip ring 1,1 and shiftable linkage 1	Spider hardness	Compo-nent	Bore	Compo-nent	Bore

Additional designs

Components

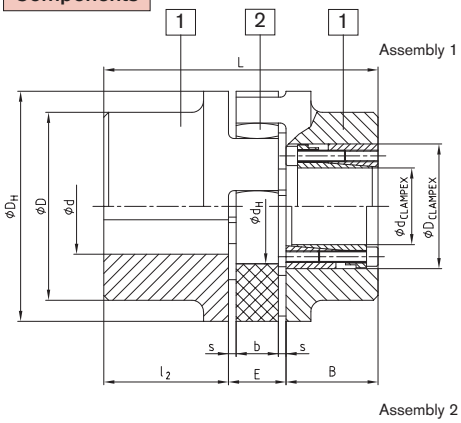

ROTEX® type No. 001 with clamping unit CLAMPEX® KTR 200

Size	Ød ØD ØD1	Hub material	CLAMPEX® KTR 200 Largest poss KTR clamping set dxD	Transmittable torques and force T [lb-in]	Transmittable torques and force F_{AX} [lbf]	B	Dimensions [in] l_2	E	s	b	D_H	D	d_H	L
42	Maximum bore size dependent on hub style and material, refer to design No. 001 for details	Steel	30x55	6,800	11,460	1.89	1.97	1.02	0.12	0.79	3.74	—	1.81	length L = l_2 + E + B (clamping set)
48			35x60	10,590	15,280	1.89	2.20	1.10	0.14	0.83	4.13	—	2.01	
55			45x75	18,870	21,350	2.32	2.56	1.18	0.16	0.87	4.72	—	2.36	
65			45x75	18,870	21,350	2.32	2.95	1.38	0.18	1.02	5.31	4.53	2.68	
75			50x80	27,960	28,320	2.32	3.35	1.57	0.20	1.18	6.30	5.31	3.15	
90			65x95	36,350	28,320	2.32	3.94	1.77	0.22	1.34	7.87	6.30	3.94	
100		EN-GJS-400-15	65x95	36,350	28,320	2.32	4.33	1.97	0.24	1.50	8.86	7.09	4.45	
110			70x110	62,160	45,180	2.76	4.72	2.17	0.26	1.65	10.04	7.87	5.00	
125			80x120	71,030	45,180	2.76	5.51	2.36	0.28	1.81	11.42	9.06	5.79	
140			95x135	100,660	53,720	2.76	6.10	2.56	0.30	1.97	12.60	10.04	6.50	
160			110x155	142,210	65,640	3.15	6.89	2.95	0.35	2.24	14.57	11.42	7.48	
180			120x165	193,920	82,050	3.15	7.68	3.35	0.41	2.52	16.54	12.80	8.66	

ROTEX® type No. 001 with clamping unit CLAMPEX® KTR 200

KTR 200 Size	Length	Transmittable torque and axial force		Clamping screw DIN EN ISO 4762 – 12.9		KTR 200 Size	Length	Transmittable torque and axial force		Clamping screw DIN EN ISO 4762 – 12.9		KTR 200 Size	Length	Transmittable torque and axial force		Clamping screw DIN EN ISO 4762 – 12.9	
dxD	B	T [lb-in]	F_{ax} [lbf]	zxM	T_A [lb-in]	dxD	B	T [lb-in]	F_{ax} [lbf]	zxM	T_A [lb-in]	dxD	B	T [lb-in]	F_{ax} [lbf]	zxM	T_A [lb-in]
20x47	1.89	4,540	11,460	6xM6	150	38x65	1.89	11,490	15,280	8xM6	150	65x95	2.32	36,340	28,320	8xM8	363
22x47	1.89	4,990	11,460	6xM6	150	40x65	1.89	12,100	15,280	8xM6	150	70x110	2.76	62,150	45,180	8xM10	735
24x50	1.89	5,450	11,460	6xM6	150	42x75	2.32	17,610	21,350	6xM8	363	75x115	2.76	66,580	45,180	8xM10	735
25x50	1.89	5,670	11,460	6xM6	150	45x75	2.32	18,860	21,350	6xM8	363	80x120	2.76	71,030	45,180	8xM10	735
28x50	1.89	6,350	11,460	6xM6	150	48x80	2.32	26,840	28,320	8xM8	363	85x125	2.76	94,330	56,420	10xM10	735
30x55	1.89	6,800	11,460	6xM6	150	50x80	2.32	27,950	28,320	8xM8	363	90x130	2.76	99,880	56,420	10xM10	735
32x60	1.89	9,680	15,280	8xM6	150	55x85	2.32	30,750	28,320	8xM8	363	95x135	2.60	100,650	53,720	10xM10	735
35x60	1.89	10,590	15,280	8xM6	150	60x90	2.32	33,550	28,320	8xM8	363	For further details please see CLAMPEX® catalog					

Components

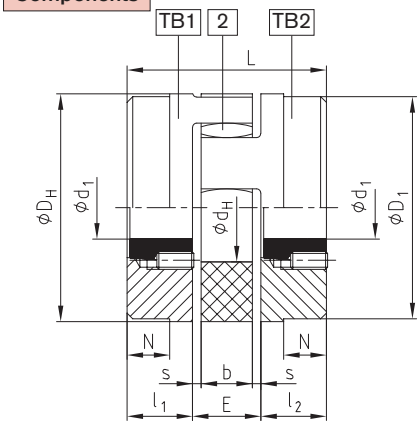

ROTEX® design No. 001 with Taper-loc Bushing

Size	Taper-Clamp Bushing	Dimensions [in] l_1;l_2	E	s	b	L	N	D_H	D_1	d_H	Set screw for taper bushing Size [Inch]	Length [in]	Number	T_A [lb-in]
28	1108	0.91	0.79	0.10	0.59	2.60	—	2.56	2.56	1.18	1/4"	1/2"	2	50
38	1108	0.91	0.94	0.12	0.71	2.76	0.59	3.15	3.07	1.50	1/4"	1/2"	2	50
42	1610	1.02	1.02	0.12	0.79	3.07	0.63	3.74	3.70	1.81	3/8"	5/8"	2	177
48	1615	1.54	1.10	0.14	0.83	4.17	1.10	4.13	4.09	2.01	3/8"	5/8"	2	177
55	2012	1.30	1.18	0.16	0.87	3.78	0.79	4.72	4.65	2.36	7/16"	7/8"	2	274
75	2517	2.05	1.57	0.20	1.18	5.67	1.42	6.30	5.31	3.15	1/2"	1"	2	434
	▪ 3020										5/8"	1 1/4"		814

▪ Only available for design TB 2
* 1. BSW thread

Coupling design TB 1/1; TB 2/2; TB 1/2 possible

▪ Please request sheet M373054.

Additional designs with torque limiter

Due to the many applications of ROTEX® in several different mounting situations, this coupling system is available with various hub designs. These designs are available for either keyed or frictionally engaged connections. Installation for gear shafts with integrated jaws or similar applications are also available.

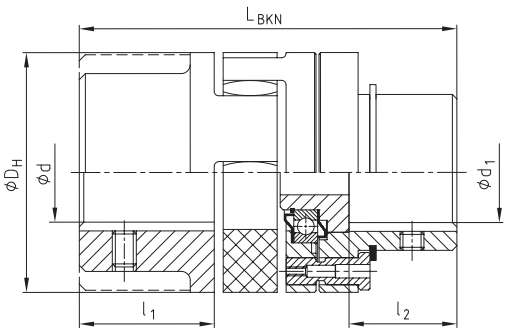

ROTEX® BKN - shear pin coupling, design BKN No. 009

Size	Ød	Max. Ød$_1$	l_1	l_2	L_{BKN}	D_H	Min. fracture torque [lb-in]
28	Maximum bore size dependent on hub style and material, refer to design No. 001 for details	1.125	1.38	0.98	3.98	2.56	880
38		1.438	1.77	1.38	4.92	3.15	1,680
42		1.563	1.97	1.57	5.47	3.74	2,210
48		1.813	2.20	1.81	6.02	4.13	2,650
55		2.125	2.56	2.17	6.97	4.72	3,540
65		2.500	2.95	2.56	7.95	5.31	4,420
75		2.813	3.35	2.76	9.06	6.30	5,310
90		3.875	3.94	3.35	10.47	7.87	6,190

Shear torques required with your order.
Request sheet 5020/000/009-7603

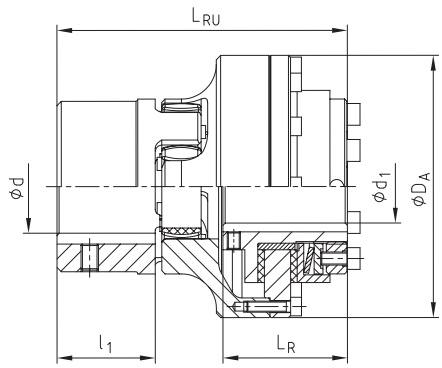

ROTEX® - RUFLEX® - coupling with torque limiter, design No. 070

ROTEX® Size	RUFLEX® Size	Slip torques [lb-in]	Ød	Ød$_1$ max.	D_A	l_1	L_R	L_{RU}
14	00	4 — 44	Maximum bore size dependent on hub style and material, refer to design No. 001 for	0.375	1.73	0.43	1.22	2.32
19	0	18 — 170		0.750	2.48	0.98	1.30	3.07
24	01	44 — 610		0.875	3.15	1.18	1.77	3.86
28	1	170 — 1,770		1.000	3.86	1.38	2.05	4.45
38	2	220 — 3,540		1.313	4.72	1.77	2.24	5.24
48	3	440 — 7,080		1.688	6.38	2.20	2.68	6.54
75	4	790 — 14,160		2.125	7.28	3.35	3.07	8.07

[1] Shallow key required for shafts above Ø.75.

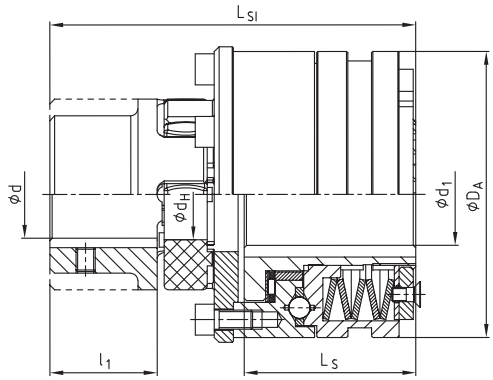

ROTEX® - KTR-SI - coupling with torque limiter, design No. 070

ROTEX® Size	KTR-SI design	KTR-SI Size	Ratchet torque [lb-in]	Ød	max. Ød$_1$	D_A	l_1	L_S	L_{SI}
28	DK	2	100 - 1,770	Maximum bore size dependent on hub style and material, refer to design No. 001 for details	1.313	3.94	1.38	2.20	4.88
	SR/SGR	0	44 - 350		0.813	2.17		1.36	4.02
38	DK	3	220 - 3,980		1.688	4.72	1.77	2.87	6.10
	SR/SGR	1	100 - 880		1.000	3.23		1.89	5.10
48	DK	4	440 - 8,850		2.125	5.75	2.20	3.68	7.64
	SR/SGR	2	220 - 1,770		1.313	3.94		2.20	6.10
55	DK	5	750 - 17,700		2.500	6.93	2.56	4.21	8.76
	SR/SGR	3	440 - 3,980		1.688	4.72		2.87	7.32
75	DK	—	—		—	—	3.35	—	—
	SR/SGR	4	880 - 17,700		2.125	5.75		3.68	9.51
90	DK	—	—		—	—	3.94	—	—
	SR/SGR	5	1500 - 30,090		2.500	6.93		4.21	10.85

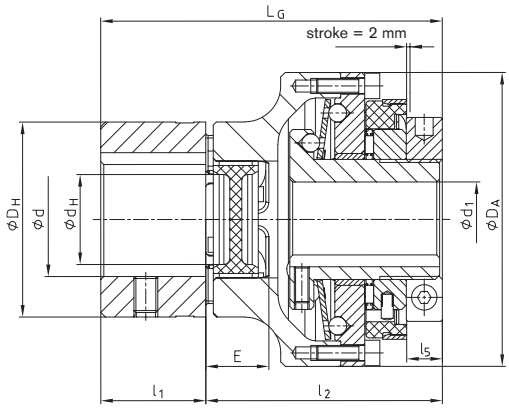

SYNTEX® - zero-backlash, torsionally rigid overload coupling with ROTEX® - GS

ROTEX® Size	SYNTEX® Size	SYNTEX® torque range disc spring [lb-in]				Max. bore		D_A	D_H	d_H	E	L	L_G	l_1	l_2	l_5
		DK_1	DK_2	SK_1	SK_2	d	d_1									
24	20	50-170	130-260	80-170	170-570	1.313	0.813	3.15	2.17	1.06	0.71	1.77	3.94	1.18	2.76	0.39
28	25	170-530	390-790	220-570	350-880	1.500	1.000	3.86	2.56	1.18	0.79	1.97	4.45	1.38	3.07	0.43
38	35	220-700	660-1,320	260-880	610-1,590	1.813	1.313	4.72	3.15	1.50	0.94	2.36	5.35	1.77	3.58	0.51
48	50	530-1,590	1,540-2,650	700-2,470	1,410-3,540	2.125	1.875	6.38	4.13	2.01	1.10	2.76	6.57	2.20	4.37	0.55

Hub designs

Design 1.0 hub with keyway and set screw

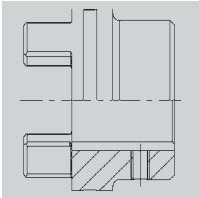

Positive hub to shaft connection. Transmittable torque is dependent on surface pressure on the keyway only.

Design 1.1 hub without keyway, with setscrew

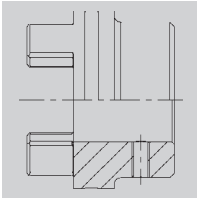

Positive torque transmission for pressed or glued connections. (No ATEX certification available)

Design 1.3 hub with spline bore

Design 2.0 clamping hub, single slotted, without keyway

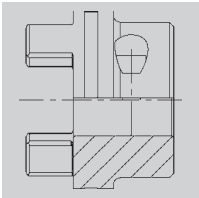

Frictionally engaged shaft-hub connection. Transmittable torque depends on the bore size. (Only for ATEX category 3)

Design 2.1 clamping hub, single slotted, with keyway

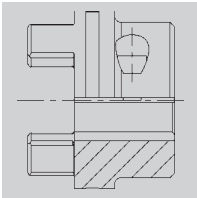

Positive torque transmission with additional frictional torque capacity. The additional frictional torque capacity reduces backlash. Surface pressure of the keyway is also reduced.

Design 2.3 clamping hub with spline bore (page 33)

Design 4.2 with CLAMPEX® clamping element KTR 250

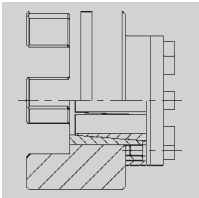

Frictionally engaged shaft-hub connection for average torque.

Design 4.1 w. CLAMPEX® clamping set KTR 200/f. KTR 400 design 4.3

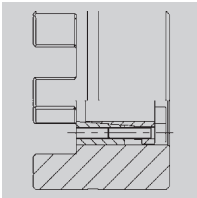

Frictionally engaged, zero-backlash shaft-hub connection for high torque. Largest clamping device possible depends on the hub O.D. Clamping device can be mounted on jaw side or back face. For details, see the CLAMPEX® section.

Design 6.0 clamping ring hub (see ROTEX® GS series)

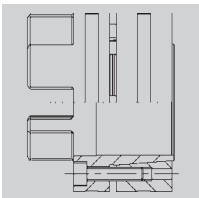

Integrated frictionally engaged shaft-hub-connection for high torque. Fasteners are in the face of the hub. For details about torques and dimensions see page 32. Suitable for high speeds.

Design 6.5 clamping ring hub

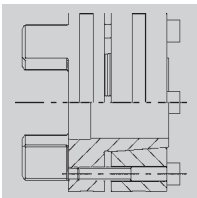

Design equal to 6.0, but fasteners are on the back face. Suitable for easy disassembly of intermediate shafts (special design).

Design 7.5 axially split clamping hub without keyway for a double-cardanic connection

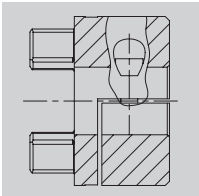

Frictionally engaged shaft-hub connection for radial assembly of couplings. Transmittable torque depends on the bore size (only for ATEX category 3).

Design 7.6 axially split clamping hub without keyway for a double-cardanic connection

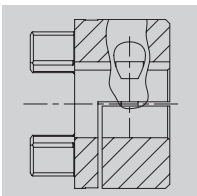

Positive power transmission with frictionally engaged operation for radial assembly of couplings. The frictionally engaged operation reduces backlash. Surface pressure of the keyway connection is reduced.

Design 7.8 axially split clamping hub without keyway

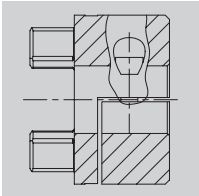

Frictionally engaged shaft-hub connection for radial assembly of couplings.Transmittable torque depends on the bore size (only for ATEX category 3)

Design 7.9 axially split clamping hub with keyway

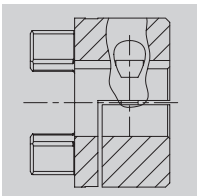

Positive torque transmission with keyway for radial assembly of couplings. Positive lock reduces backlash. Surface pressure of the keyway connection is reduced.

Special hubs on request

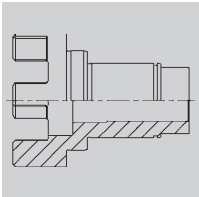

Special lengthened hub/shaft with integrated jaws.

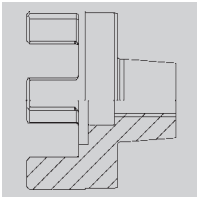

Special hub with an external taper for a frictional connection.

Weights and mass moment of inertia

Components

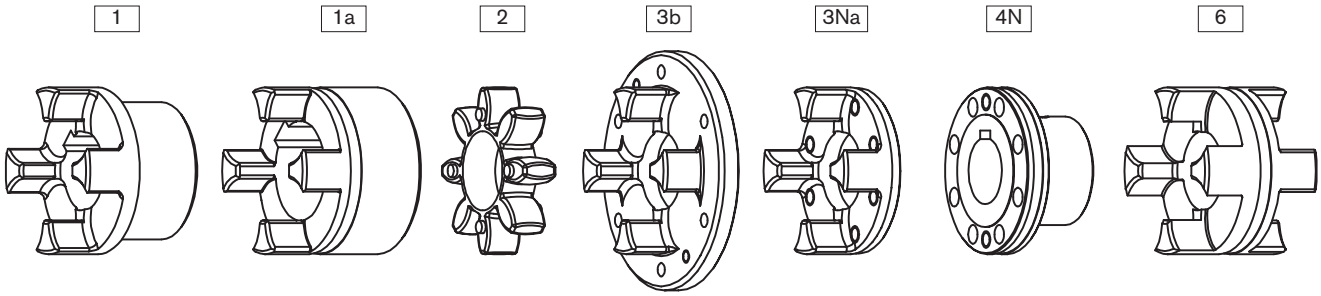

ROTEX® component values

Size	Standard hub				Large hub			Spider	Driving flange			Coupling flange	DKM spacer
	Part 1				Part 1a			Part 2	Part 3b	Part 3Na		Part 4N	
	Alu [lbs] [lb-in-sec²]	EN-GJL-250 [lbs] [lb-in-sec²]	EN-GJS-400-15 [lbs] [lb-in-sec²]	St [lbs] [lb-in-sec²]	Alu [lbs] [lb-in-sec²]	EN-GJL-250 [lbs] [lb-in-sec²]	St [lbs] [lb-in-sec²]	Polyurethane (Vulkollan) [lbs] [lb-in-sec²]	EN-GJS- [lbs] [lb-in-sec²]	St [lbs] [lb-in-sec²]	EN-GJS-400-15 [lbs] [lb-in-sec²]	St [lbs] [lb-in-sec²]	Alu [lbs] [lb-in-sec²]
14	—	—	—	—	0.0441	—	—	0.0097	—	—	—	—	—
	—	—	—	—	0.0000266	—	—	0.0000044	—	—	—	—	—
19	0.141	—	—	—	0.163	—	0.551	0.012	—	—	—	—	—
	0.000089	—	—	—	0.000177	—	0.000531	0.000009	—	—	—	—	—
24	0.271	—	—	—	0.384	—	1.213	0.031	0.062	0.320	—	0.662	0.309
	0.000354	—	—	—	0.000708	—	0.002036	0.000053	0.002036	0.000620	—	0.000797	0.000531
28	0.441	—	—	—	0.582	—	1.962	0.053	1.191	0.512	—	1.080	0.485
	0.000885	—	—	—	0.001682	—	0.004691	0.000089	0.006195	0.001505	—	0.001770	0.001151
38	0.970	2.56	—	3.31	1.04	2.91	2.80	0.093	1.61	—	0.690	1.92	0.772
	0.002921	0.007611	—	0.010709	0.004071	0.011948	0.012390	0.000266	0.008850	—	0.003363	0.004425	0.003098
42	1.52	3.86	—	5.56	1.70	4.52	4.06	0.143	2.78	—	1.34	3.09	1.04
	0.005930	0.015753	—	0.025046	0.009824	0.025754	0.015045	0.000620	0.028320	—	0.007877	0.009735	0.006018
48	1.76	5.38	—	7.36	2.23	6.13	6.04	0.190	3.20	—	1.66	4.23	1.37
	0.097350	0.027258	—	0.041861	0.015399	0.042834	0.046020	0.001151	0.038055	—	0.012018	0.015930	0.009735
55	—	8.11	—	11.14	—	9.00	8.67	0.243	5.69	—	2.74	6.46	1.98
	—	0.054428	—	0.083898	—	0.081951	0.088500	0.002036	0.092925	—	0.025842	0.032745	0.018585
65	—	12.50	—	14.97	—	13.32	12.90	0.375	6.84	—	3.61	9.61	2.89
	—	0.109740	—	0.134166	—	0.158327	0.168150	0.003717	0.131865	—	0.043285	0.061065	0.034515
75	—	19.23	—	23.22	—	21.01	19.98	0.706	9.83	—	5.54	14.99	4.34
	—	0.233994	—	0.289661	—	0.349221	0.354000	0.010266	0.248685	—	0.092925	0.133635	0.072570
90	—	32.63	—	41.23	—	40.13	37.49	1.26	15.30	—	9.15	28.31	7.61
	—	0.595605	—	0.773667	—	1.335111	1.035450	0.028586	0.576135	—	0.240986	0.396480	0.198240
100	—	—	43.44	—	—	—	—	1.79	22.49	—	14.00	35.63	—
	—	—	1.034919	—	—	—	—	0.052038	1.031025	—	0.466661	0.706230	—
110	—	—	60.42	—	—	—	—	2.62	—	—	18.91	47.08	—
	—	—	1.811153	—	—	—	—	0.097085	—	—	0.807209	2.499240	—
125	—	—	93.27	—	—	—	—	3.59	—	—	27.78	75.70	—
	—	—	3.604340	—	—	—	—	0.174522	—	—	1.546007	2.857665	—
140	—	—	128.1	—	—	—	—	4.65	—	—	38.08	107.4	—
	—	—	5.994902	—	—	—	—	0.276917	—	—	2.588360	4.351545	—
160	—	—	185.7	—	—	—	—	7.08	—	—	58.00	156.7	—
	—	—	11.658017	—	—	—	—	5.595678	—	—	5.260086	8.578305	—
180	—	—	261.3	—	—	—	—	11.58	—	—	72.93	241.3	—
	—	—	20.428898	—	—	—	—	1.220327	—	—	8.619369	17.390250	—

Weight and mass moment of inertia each refer to the mid-range bore without keyway.

Weights and mass moment of inertia

ROTEX® complete coupling values												
Size	AFN		BFN		CF		DF		ZWN [1]		SD	
	Weight [lb]	Mass moment of inertia J [lb-in-sec²]	Weight [lbs]	Mass moment of inertia J [lb-in-sec²]	Weight [lbs]	Mass moment of inertia J [lb-in-sec²]	Weight [lbs]	Mass moment of inertia J [lb-in-sec²]	Weight [lbs]	Mass moment of inertia J [lb-in-sec²]	Weight [lbs]	Mass moment of inertia J [lb-in-sec²]
19	—	—	—	—	0.97	0.000160	0.84	0.000200	—	—	0.93	0.000080
24	2.16	0.000360	2.43	0.000410	1.85	0.000470	1.26	0.000470	4.85	0.000840	2.43	0.000460
28	3.53	0.000830	3.75	0.000950	3.31	0.001240	2.43	0.001410	7.94	0.001930	4.19	0.001060
38	6.17	0.002090	5.73	0.001930	4.19	0.002170	3.31	0.002590	12.1	0.003930	6.62	0.004350
42	9.92	0.004720	9.04	0.004190	6.84	0.005130	5.73	0.006620	19.0	0.008530	9.70	0.008040
48	13.0	0.007360	12.1	0.006840	8.60	0.007550	6.62	0.008810	24.9	0.013800	13.7	0.002230
55	19.6	0.014800	18.3	0.013690	14.1	0.016920	11.7	0.021310	39.0	0.027900	21.6	0.016600
65	28.4	0.026600	27.1	0.025900	19.6	0.027800	14.1	0.003037	58.0	0.053100	32.9	0.032600
75	45.4	0.060100	42.6	0.057200	29.8	0.055700	20.3	0.057410	91.7	0.117200	51.2	0.070600
90	83.3	0.171800	75.4	0.155100	49.2	0.135600	32.0	0.133300	161	0.317300	89.3	0.189100
100	109	0.306800	99.7	0.273700	68.1	0.240100	46.7	0.239400	218	0.562900	103	0.246700
110	149	0.538500	136	0.479300	94.6	0.432400	65.7	0.444600	298	0.986000	136	0.418600
125	226	1.048500	208	0.941300	142	0.818700	93	0.803100	455	1.937000	213	0.849700
140	311	1.743000	286	1.564000	199	1.422100	138	1.458000	625	3.222000	282	1.368000
160	464	3.517000	421	3.107000	281	2.589000	184	2.480500	922	6.393000	420	2.723000
180	676	6.582000	605	5.668000	386	4.448000	238	4.141000	1327	11.682000	578	4.810000

BTAN/SBAN without drum/disc		
Size	Weight [lbs]	Mass moment of inertia J [kgm²]
28	0.90	0.0004
38	2.10	0.0014
42	3.24	0.0031
48	4.41	0.0053
55	6.60	0.0105
65	10.1	0.0209
75	15.4	0.0442
90	27.6	0.1224
100	36.9	0.2074
110	50.9	0.3665
125	79.1	0.7349
140	109	1.2292
160	162	2.4569
180	233	4.4967

Drum for BTAN [2]		
Brake disc $\varnothing D_B$ x B	Weight [lbs]	Mass moment of inertia J [lb-in-sec²]
160 x 60	4.67	0.08851
200 x 75	7.61	0.26553
250 x 95	15.1	0.70808
315 x 118	33.0	2.47828
400 x 150	68.8	7.87739
500 x 190	132	23.8977
630 x 236	247	70.8965
710 x 265	355	131.880
800 x 300	445	240.747

Disc for SBAN [2]		
Brake disc $\varnothing A$ x G_S	Weight [lbs]	Mass moment of inertia J [lb-in-sec²]
200x12.5	6.46	0.1360133
250x12.5	10.28	0.3326560
315x16	19.00	0.9897985
400x16	33.58	2.7898883
500x16	52.84	6.8149425
630x20	105.2	21.475704
710x20	134.4	34.652550
800x25	209.3	69.737011
900x25	262.3	111.60305
1000x25	326.9	170.24846

Weights and mass moments of inertia refer to standard hub with mid-range bore without keyway.

[1] Weights and mass moments of inertia without intermediate shaft.

[2] Selection of ROTEX® brake drum - disc brake see page 40.